Have feedback on QuickSpecs? We're listening

HPE Smart Array SR Controllers QuickSpecs

The HPE Smart Array SR Gen10 Controllers for the ProLiant DL and ML Gen10 Servers and Apollo Gen10 Servers, supporting 12Gb/s SAS and PCIe 3.0, are ideal for maximizing performance while supporting advanced RAID levels with up to 4 GB flash-backed write cache (FBWC).

Overview

These controllers operate in Mixed Mode which combines RAID and HBA/JBOD operations simultaneously. The Smart Array SR Gen10 controller portfolio is able to support up to 24 internally attached drives on a single controller allowing connection to SAS or SATA drives without having to use the SAS Expander card. The Smart Array SR Gen10 Controllers also offer encryption for data-at-rest on any drive with HPE Smart Array SR Secure Encryption. The HPE Smart Array SR Gen10 controller portfolio provides enterprise-class storage performance, reliability, security and efficiency needed to address your evolving data storage needs.



HPE Smart Array P408i-a SR Gen10 Ctrlr (804331-B21 & 869081-B21)



HPE Smart Array P816i-a SR Gen10 Ctrlr (804338-B21 & 869083-B21)



HPE Smart Array E208i-a SR Gen10 Ctrlr (804326-B21 & 869079-B21)



HPE Smart Array P408i-p SR Gen10 Ctrlr (830824-B21)



HPE Smart Array E208i-p SR Gen10 Ctrlr (804394-B21)



HPE Smart Array E208e-p SR Gen10 Ctrlr (804398-B21)



HPE Smart Array P408e-p SR Gen10 Ctrlr (804405-B21)

Models

HPE Smart Array P408i-a SR Gen10 (8 Internal Lanes/2GB Cache) 12G SAS Modular Controller	804331-B21
HPE Smart Array P408e-p SR Gen10 (8 External Lanes/4GB Cache) 12G SAS PCIe Plug-in Controller	804405-B21
HPE Smart Array E208e-p SR Gen10 (8 External Lanes/No Cache) 12G SAS PCIe Plug-in Controller	804398-B21
HPE Smart Array E208e-p SR Gen12 (8 External Lanes/No Cache) 12G SAS PCIe Plug-in Controller	P95072-B21

Overview

Notes:

- E208e-p Gen12 (P95072-B21) is only supported on Intel Gen12 systems.
- An HPE Smart Storage energy pack is required with Performance RAID controllers. See below for energy pack options.
- Smart Array Controllers cannot be configured or installed with a MegaRAID Controller except for the E208e-p (804398-B21).
- For Smart Array Controllers on Gen11 and beyond, remote Controller Based Encryption and One Button Secure Erase (OBSE) are not supported.

Compatibility

Server Support Table

SKU	804398-B21	804405-B21	804331-B21
Description	HPE Smart Array E208e-p SR Gen10 (8 External Lanes/No Cache) 12G SAS PCIe Plug-in Controller	HPE Smart Array P408e-p SR Gen10 (8 External Lanes/4GB Cache) 12G SAS PCIe Plug-in Controller	HPE Smart Array P408i-a SR Gen10 (8 Internal Lanes/2GB Cache) 12G SAS Modular Controller
HPE Apollo 2000-XL170r Gen10	✓	✓	
HPE Apollo 2000-XL190r Gen10	✓	✓	
HPE Apollo 4510-XL450 Gen10	✓	✓	✓
HPE Apollo 6000-XL230k Gen10	✓		
HPE Apollo 6500-XL270D Gen10			✓
HPE DL325 Gen10	✓	✓	
HPE ProLiant DL360 Gen10	✓	✓	✓
HPE ProLiant DL380 Gen10	✓	✓	✓
HPE ProLiant DL385 Gen10	✓	✓	✓
HPE ProLiant DL560 Gen10	✓	✓	
HPE ProLiant DL580 Gen10	✓	✓	
HPE ProLiant Microserver Gen10			
HPE ProLiant ML110 Gen10	✓	✓	
HPE ProLiant ML350 Gen10	✓	✓	✓

Overview

Naming Framework

The controller naming framework is illustrated below to help simplify controller identification.

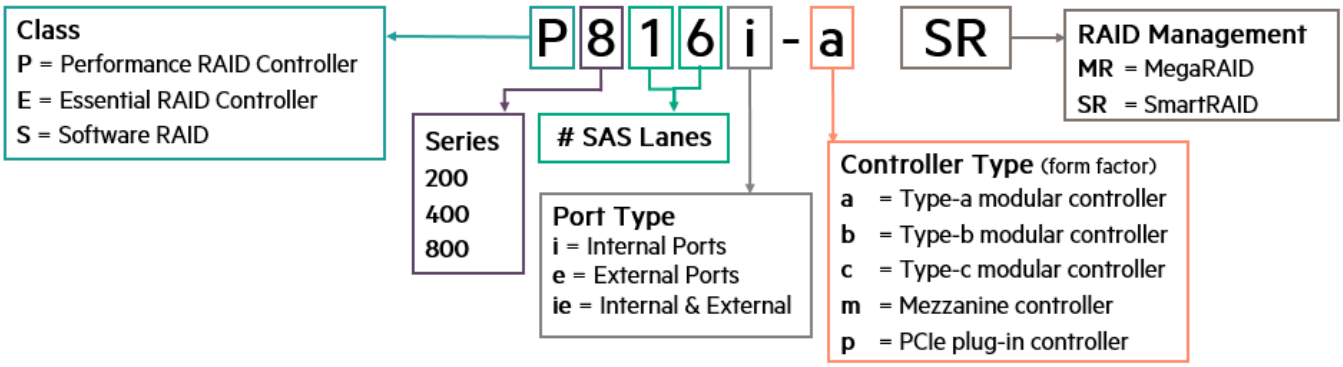

Warranty

The warranty for this device is 3 years parts only.

Warranty Upgrade Options

- Response: Upgrade on-site response from next business day to same day 4 hours.
- Coverage: Extend hours of coverage from 9 hours x 5 days to 24 hours x 7 days.
- Duration: Select duration of coverage for a period of 1, 3, or 5 years.
- Warranty upgrade options can come in the form of HPE Services operational, which are sold at the HPE System level to which this product attaches.

Overview

XXXXXX-**X21** is SKU designation formed by a common six digit part number and a **-X21** suffix that identifies a SKU that is available across multiple server family lines. Refer to the table below to find the SKU suffix that applies to the specific server product line this option can be ordered with.

-B21	-H21	-K21
COMPUTE Server Line	**SPECIALIZED COMPUTE Server Line**	**STORAGE Line**
HPE Cloudline CL2100/CL2200/CL2800/CL3100/CL4100/CL5200/CL5800 Servers HPE Composable Cloud for ProLiant DL HPE ProLiant BL460c/BL660c Servers HPE ProLiant DL20/DL160/DL180 Servers HPE ProLiant DL325/DL360/DL380/DL385/DL560/DL580 Servers HPE ProLiant DX360/DX380 Servers HPE ProLiant MicroServer HPE ProLiant for Microsoft Azure Stack HPE ProLiant ML30/ML110/ML350 Servers HPE Synergy 480/660 Systems HPE ProLiant DX170r/DX190r, DX2000 Servers HPE ProLiant DX560 Gen10 server HPE ProLiant DX4200 Gen10 server	HPE Apollo 35/40/70 Systems HPE Apollo 2000/6000 Servers HPE XL170r/XL190r/XL270d (Apollo 6500) Gen10 Server for BlueData Software HPE Converged System 300/500/700/750 HPE Edgeline Systems and Servers HPE Integrity BL860c i6/BL870c i6/BL890c i6 Server Blades HPE Integrity MC990 X Server HPE Integrity rx2800 i6 Server HPE Integrity Superdome HPE SGI 8600 System HPE Solutions for SAP HANA (TDI)	HPE Apollo 4200 Gen9/Gen10 Servers HPE Apollo 4200 Gen10 LFF Server for BlueData Software HPE Apollo 4510 Gen10 System HPE D2220sb/D2500sb Storage Blade HPE D3000/D6020/D8000 Disk Enclosures HPE Scalable Object Storage with Scality RING HPE SimpliVity 2600 HPE SimpliVity 325/380 Gen10 HPE Storage File Controllers HPE StoreEasy 1460/1560/1650/1660/1860 Disclaimer: This may not be a complete listing of applicable servers

Standard Features

Standard Features Table for Performance RAID Controllers				
Product	**P408i-a SR**	**P816i-a SR**	**P408i-p SR**	**P408e-p SR**
SKU	804331-B21 & 869081-B21	804338-B21 & 869083-B21	830824-B21	804405-B21
Form factor: Type-a modular controller	✓	✓		
Form factor: Standard PCIe plug-in controller			✓	✓
Internal SAS lanes	8	16	8	
External SAS lanes				8
Ports/Connectors	2 (mini-SAS)	4 (mini-SAS)	2 (mini-SAS)	2 (mini-SAS HD)
Cache size (FBWC)	2 GB	4 GB	2 GB	4 GB
Read ahead caching	✓	✓	✓	✓
Write-back caching	✓	✓	✓	✓
Storage protocol: 12G SAS	✓	✓	✓	✓
Storage protocol: 6G SATA	✓	✓	✓	✓
I/O slot: PCI Express 3.0	x8 link	x8 link	x8 link	x8 link
Maximum physical drives	238	238	238	238
Maximum logical drives	64	64	64	64
RAID:0/1/5/6/10/50/60/ 1TP/10TP	✓	✓	✓	✓
Mixed Mode (RAID & HBA/JBOD)	✓	✓	✓	✓
Boot mode: UEFI	✓	✓	✓	✓
Boot mode: Legacy	✓	✓	✓	✓
SSD Accelerator	Smart Path	Smart Path	Smart Path	Smart Path
HPE Smart Array SR	Optional	Optional	Optional	Optional
Secure Encryption				
SSD Caching	Optional (SmartCache)	Enabled (SmartCache)	Optional (SmartCache)	Optional (SmartCache)
FIPS 140-2 Level 1 Validation**	✓	✓	✓	✓
HPE OneView Support	✓	✓	✓	✓
Kit contents	Controller, documentation information card, warranty statement, and battery required card.	Controller, documentation information card, warranty statement, and battery required card.	Controller, documentation information card, warranty statement, battery required card, controller backup power cable, and low-profile bracket.	Controller, documentation information card, warranty statement, battery required card, controller backup power cable, and low-profile bracket.

Standard Features

Standard Features Table for Essential RAID Controllers			
Product	E208i-a SR	E208i-p SR	E208e-p SR
SKU	804326-B21	804394-B21	804398-B21 P95072-B21
	869079-B21		
Form factor: Type-a	✓		
modular controller			
Form factor: Standard		✓	✓
plug-in controller			
Internal lanes	8	8	
External lanes			8
Ports/Connectors	2	2	2
	(mini-SAS)	(mini-SAS)	(mini-SAS HD)
Cache size (FBWC)			
Read ahead caching			
Write-back caching			
Storage protocol: 12G SAS	✓	✓	✓
Storage protocol: 6G SATA	✓	✓	✓
I/O slot: PCI Express 3.0	x8 link	x8 link	x8 link
Maximum physical drives (up to)	238	238	238
Maximum logical drives	64	64	64
RAID: 0/1/5/10	✓	✓	✓
Mixed mode	✓	✓	✓
(RAID & HBA)			
Boot mode: UEFI	✓	✓	✓
Boot mode: Legacy	✓	✓	✓
SSD Accelerator	Smart Path	Smart Path	Smart Path
HPE Smart Array SR	Optional	Optional	Optional
Secure Encryption			
SSD Caching			
FIPS 140-2 Level 1 Validation**			
HPE OneView Support	✓	✓	✓
Kit contents	Controller, documentation information card, and warranty statement	Controller, documentation information card, warranty statement, and low-profile bracket	Controller, documentation information card, warranty statement, and low-profile bracket

Operating System Support

- Microsoft Windows Server
- Red Hat Enterprise Linux (RHEL)
- SUSE Linux Enterprise Server (SLES)
- VMware ESXi
- Canonical Ubuntu
- CentOS
- ClearOS

Notes: HPE Smart Array controllers are supported by the server operating system. Please also see the server operating system compatibility. For more information on HPE's server operating systems and virtualization software, please visit: http://www.hpe.com/info/ossupport.

Storage Management Software Suite

HPE Smart Array SR Gen10 Controllers

- HPE Smart Storage Administrator (SSA) GUI
- HPE Smart Storage Administrator (SSA) CLI
- HPE Smart Storage Administrator (SSA) Scripting
- HPE Intelligent Provisioning
- UEFI System Utilities (storage configuration)
- UEFI Storage RESTful

Notes: For additional information see the HPE Smart Array SR Gen10 Configuration Guide at: http://www.hpe.com/info/SmartArrayGen10-docs.

Disk Enclosure Support

E208e-p SR Gen10 Controller (804398-B21 / P95072-B21)

- HPE D3610 Disk Enclosure
- HPE D3710 Disk Enclosure
- HPE D6020 Disk Enclosure
- HPE MSA 1040 SAN Storage
- HPE MSA 1050 SAN Storage
- HPE MSA 2040 SAN Storage
- HPE MSA 2050 SAN Storage

P408e-p SR Gen10 Controller (804405-B21)

- HPE D3610 Disk Enclosure
- HPE D3710 Disk Enclosure
- HPE D6020 Disk Enclosure

Notes: For Disk Enclosures, including but not limited to, some expanders do not scan the drives on time for the controller to discover them. To prevent the logical device from being marked as failed once the controller is up, users need to configure the expander's minimum scan duration setting. This setting instructs the controller to wait for a specified number of seconds to scan and discover drives attached to the expander during the next power cycle. The setting can be found in the following menu path: "RBSU > System Utilities > System Configuration > HPE Smart Array E208e-p SR Gen10 > Configure Controller Settings > Modify Expander Minimum Scan Duration (Seconds)."

Additional Information

HPE Smart Array SR Gen10 Controllers

For additional information on the features for HPE Smart Array SR Gen10 Controllers, please see the HPE Smart Array SR Gen10 User Guide, HPE Smart Array SR Gen10 Configuration Guide, and HPE Smart Array SR Secure Encryption Installation and User Guide at: http://www.hpe.com/info/SmartArrayGen10-docs.

Service and Support

For the most up-to-date information on HPE Services, please refer to the HPE Services – Supplemental QuickSpecs, which provides a comprehensive and regularly updated overview of available services.

Related Options

HPE Smart Array SR SmartCache

Single-Server License

Used to purchase a license for one server.
Contains one license per server, a printed license entitlement certificate, end user license agreement, and license key installation card **delivered via physical shipment**. The license entitlement certificate must be redeemed online or via fax in order to obtain the license activation key(s). Include one year of 24x7 HPE Software Technical Support Services.

Flexible-Quantity License

Used to purchase multiple licenses with a single activation key.
Contains license(s) for a customer defined quantity of servers, a license entitlement certificate for the quantity of licenses purchased, end user license agreement, and license key installation card **delivered via physical shipment**. The license entitlement certificate must be redeemed online or via fax in order to obtain the license activation key(s). Include one year of 24x7 HPE Software Technical Support Services.

Flexible-Quantity Electronic License

Used to purchase multiple licenses with a single activation key.
Contains license(s) for a customer defined quantity of servers, a license entitlement certificate for the quantity of licenses purchased, end user license agreement, and license key installation information **delivered via e-mail**. The license entitlement certificate must be redeemed online or via fax in order to obtain the license activation key(s). Include one year of 24x7 HPE Software Technical Support Services.

Notes: For more information please visit: http://www.hpe.com/servers/smartcache**.**

HPE Smart Array SR Secure Encryption

HPE Smart Array SR Secure Encryption (Data at Rest Encryption/per Server Entitlement) E-LTU	Q2F26AAE

Notes: HPE Smart Array SR Secure Encryption licensing is based on the number of servers requiring encryption for direct attached storage.
Notes: For more information visit: http://www.hpe.com/servers/secureencryption or see the HPE Smart Array SR Secure Encryption Installation and User Guide at: http://www.hpe.com/info/SmartArrayGen10-docs.

HPE 96W Smart Storage Lithium-ion Battery with 145mm Cable Kit	P01366-B21
HPE 96W Smart Storage Lithium-ion Battery with 260mm Cable Kit	P01367-B21

Notes: Smart Array Gen10 controllers are supported by the HPE Smart Storage Battery. This battery supports multiple devices and is sold separately.
Notes: See server QuickSpecs for compatibility.

HPE Smart Storage Hybrid Capacitor

HPE Smart Storage Hybrid Capacitor with 145mm Cable Kit	P02377-B21
HPE Smart Storage Hybrid Capacitor with 260mm Cable Kit	P02381-B21

Notes: The HPE Smart Storage Hybrid Capacitor is only supported on Gen10 servers or later.
Before installing the HPE Smart Storage Hybrid Capacitor, verify that the system BIOS meets the minimum firmware requirements to support the hybrid capacitor module.

Summary of Changes

Date	Version History	Action	Description of Change
08-Sep-2026	Version 12	Changed	Overview, Standard Features, Service and Support, and Related Options sections were updated.
		Removed	Obsolete SKUs are removed.
02-Feb-2026	Version 11	Changed	New branding applied to document.
05-May-2025	Version 10	Changed	Added Gen11 and beyond limitations and a note on not mixing SR and MR
01-Apr-2024	Version 9	Changed	Related Options & Compatibility Sections were updated
04-Dec-2023	Version 8	Changed	Service and Support section was updated
11-Sep-2023	Version 7	Changed	Related Options & Compatibility Sections were updated
15-Nov-2021	Version 6	Changed	Service and Support Section was updated
07-Oct-2019	Version 5	Changed	Standard Features Section was updated
15-Jul-2019	Version 4	Added	Standard Features section was updated
02-Apr-2019	Version 3	Changed	Related Options & Compatibility Sections were updated
01-Oct-2018	Version 2	Changed	Overview section was revised.
04-Sep-2018	Version 1	New	New QuickSpecs

Copyright

Have feedback on QuickSpecs? We're listening

Chat now

© Copyright 2026 Hewlett Packard Enterprise Development L.P. The information contained herein is subject to change without notice. The only warranties for Hewlett Packard Enterprise products and services are set forth in the express warranty statements accompanying such products and services. Nothing herein should be construed as constituting an additional warranty. Hewlett Packard Enterprise shall not be liable for technical or editorial errors or omissions contained herein.

a00047736enw - 16273 - Worldwide - V12 - 08-September-2026
HEWLETT PACKARD ENTERPRISE
HPE.com