Have feedback on QuickSpecs? We're listening

HPE ProLiant MicroServer Gen11 QuickSpecs

HPE ProLiant MicroServer Gen11 delivers an affordable compact yet powerful entry-level server that you can customize for on-premises, edge, hybrid cloud, or even workloads demanding datacenter performance.

It has the ultra mini tower form factor and can be placed flat or vertically or wall-mounted depending on the customer environment. The latest Intel® Xeon® 6300-series Processors, Intel® Xeon® E-2400 and Pentium® supported processors deliver compute performance as well as security and remote management into the server with HPE iLO silicon root of trust. Along with other enhancements such as 4 DIMM slots for DDR5 memory and 2 PCIe slots, It supports up to one single-wide GPU. Whether you need a general-purpose server, a NAS solution, or a virtualization server, this compact and affordable system delivers exceptional performance.

HPE ProLiant MicroServer Gen11



Front View (External)

Item	Description
1.	Drive activity LED
2.	NIC status LED[1]
3.	Health LED
4.	Power on/Standby button and system power LED
5.	USB 3.2 Gen2 Type-A ports

Notes: [1]Front NIC LED display does not support NIC LED ACT/LINK indication from the optional PCIe networking add-on cards.

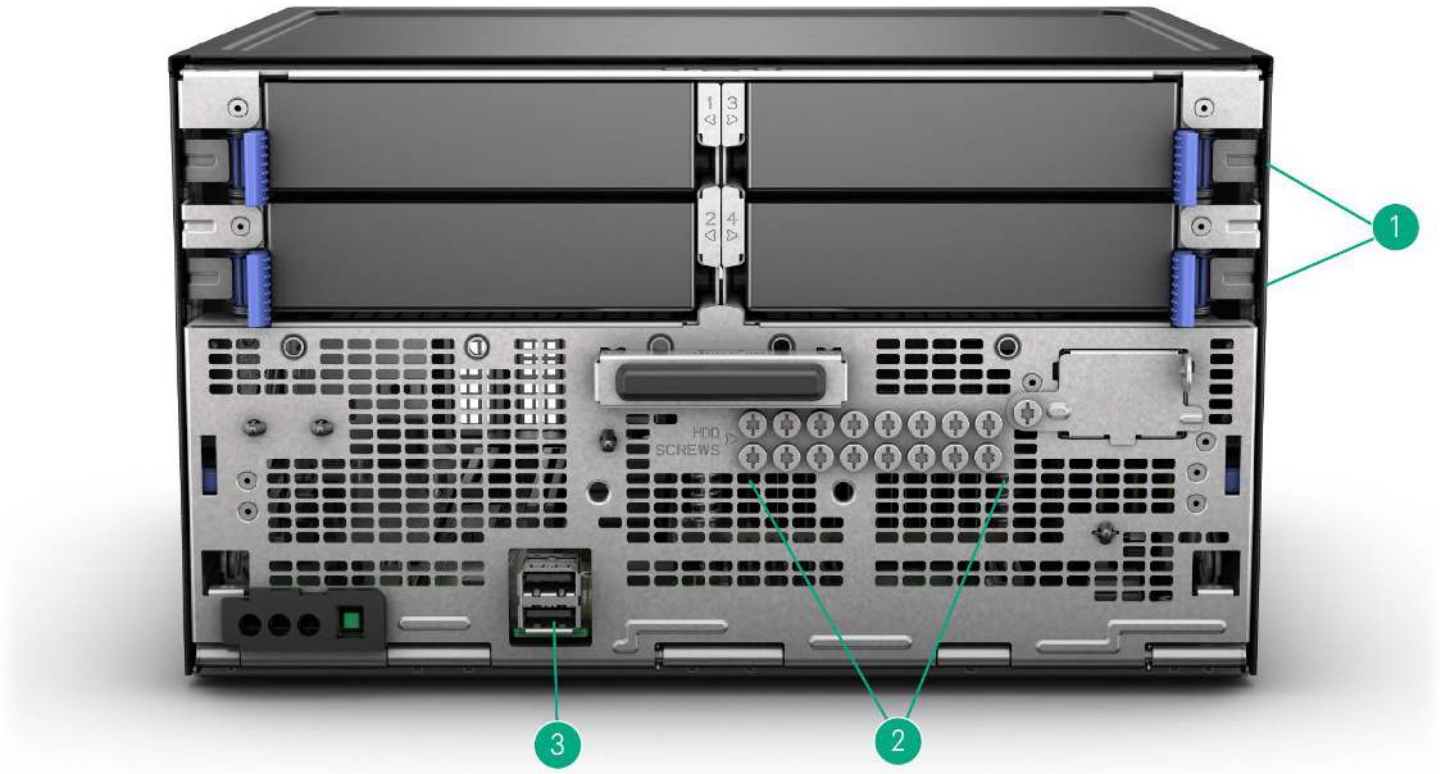

Front View (Internal) – without front bezel

Item	Description
1.	Four (4) LFF NHP SATA HDD cage
2.	Hard drive screws
3.	USB 3.2 Gen2 Type-A ports

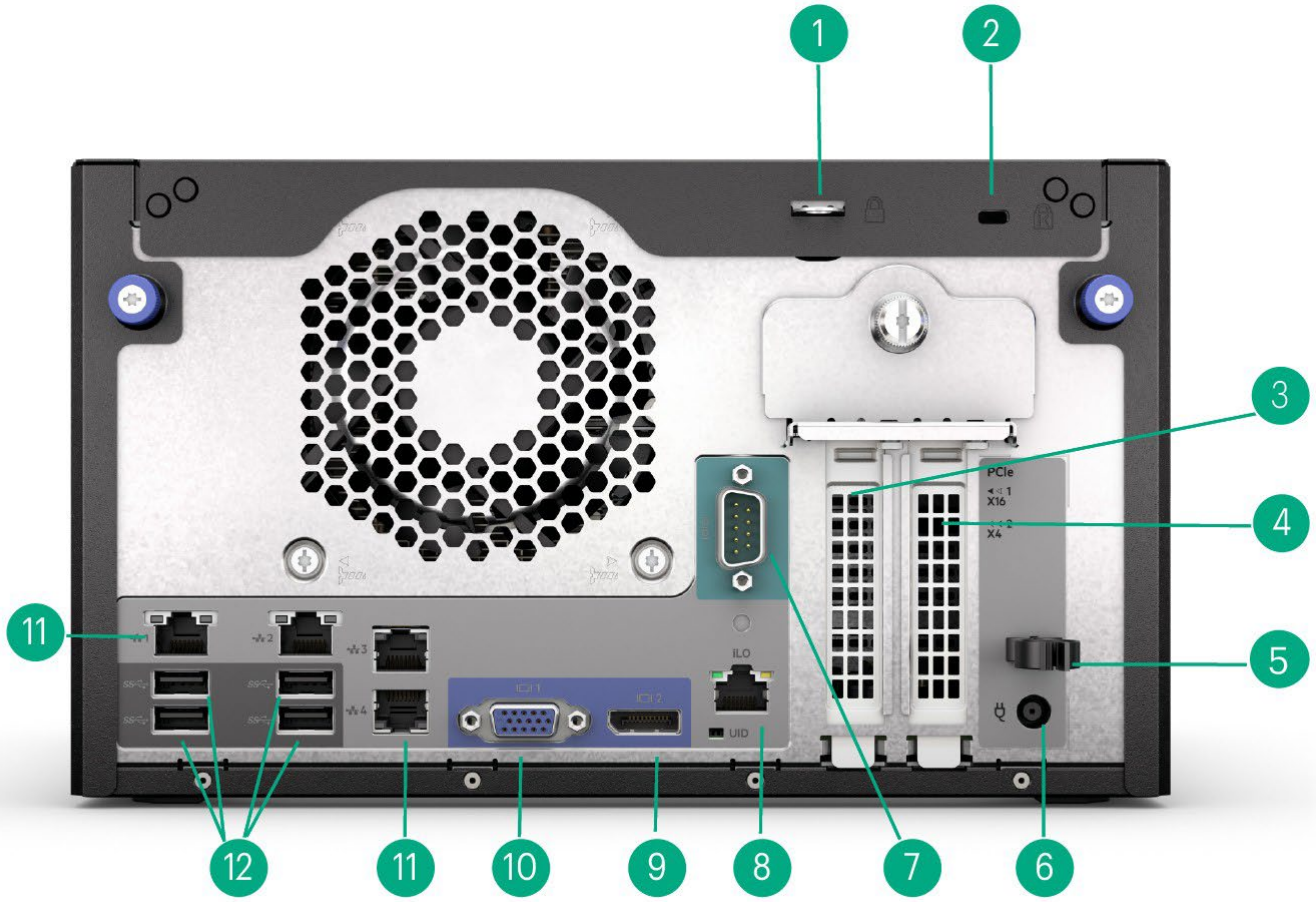

Rear View

Item	Description	Item	Description
1.	Padlock eye	7.	Serial port (optional, enabled by the dedicated iLO/M.2/serial port kit)
2.	Kensington security slot	8.	iLO dedicated NIC port (optional, enabled by the dedicated iLO/M.2/serial port kit)
3.	(1) PCIe Gen5 low-profile slot (PCIe5 x16)	9.	DisplayPort 1.1a
4.	(1) PCIe Gen4 low-profile slot (PCIe4 x8)	10.	VGA Port
5.	Power clip hole (for the power cord clip to firmly secure the power adapter cord)	11.	Four (4) NIC ports (NIC1-4 from left, where NIC port #1 supports shared iLO port)
6.	Power jack	12.	Four (4) USB 3.2 Gen1 Type-A ports

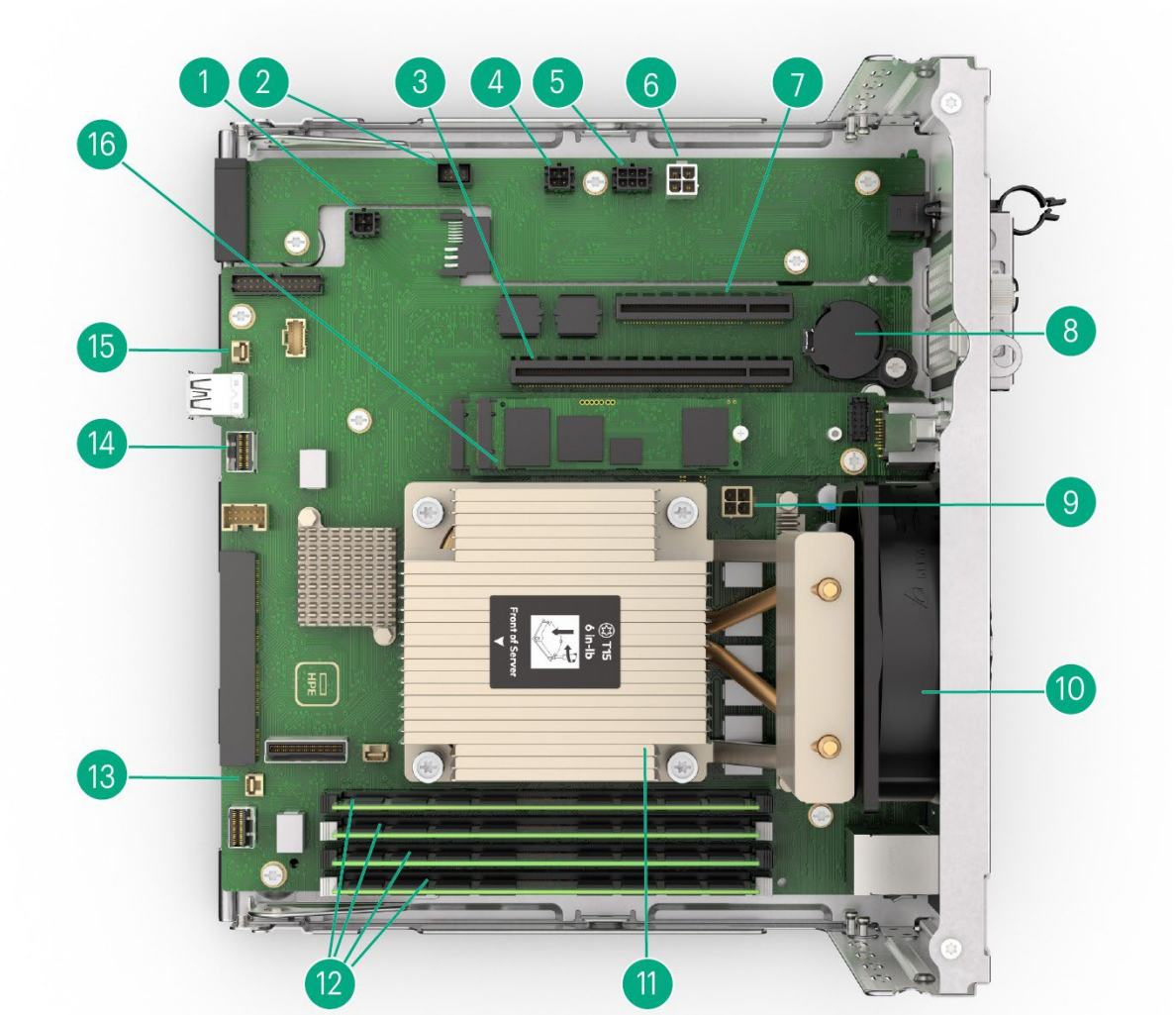

Mainboard View (Internal)

Item	Description	Item	Description
1.	System board: System power connector	9.	System board: 4-pin processor power connector
2.	Fan connector	10.	System fan
3.	Slot 1 PCIe5 x16	11.	One (1) processor and heatsink
4.	PDB: System power connector	12.	Four (4) DDR5 UDIMM slots
5.	Drive power connector	13.	Ambient temperature sensor connector
6.	PDB: 4-pin processor power connector	14.	SlimSAS x4 port
7.	Slot 2 PCIe4 x8	15.	Storage controller backup power connector
8.	Coin battery	16.	M.2 slot (optional, enabled by the dedicated iLO/M.2/serial port kit)

What's New

- Supports the latest Intel® Xeon® 6300-series Processors – now up to 12-core/95 W, Intel® Xeon® E-2400 and Pentium® processors.
- Supports 4 DIMM slots for the New HPE DDR5 Standard Memory (UDIMM), 4400 MT/s maximum speed offering in 16 GB and 32 GB. Max 128 GB system memory capacity (4 x 32 GB).
- Two PCIe expansion slots including one that supports PCIe 5.0.
- NVIDIA A400 GPUHPE iLO 6 support.
- Embedded TPM 2.0 support.
- Supports one internal M.2 slot and one serial port enabled by the optional Gen11 dedicated iLO/M.2/serial port kit.
- Supports CTO capability.
- Supports Wall Mount Kit.
- The HPE iLO remote server management support is now enabled through the shared iLO port default on-board. Customers can access HPE iLO from their browser, command line, or API without the need of the additional module/or activation key. For more information, please contact HPE local customer support.

Processor

Intel® Xeon® 6300-series and Xeon® E Processor is designed to deliver the best combination of performance, built-in capabilities, and cost-effectiveness. This server also supports Intel® Pentium® processor.
Choose one of the following processors based on the model:

Intel® Xeon® 6300 Series						
Model	**CPU Base Frequency**	**Cores**	**Threads**	**Smart Cache**	**Power**	**DDR5**
Xeon® 6377P	3.1 GHz	12	24	16 MB	95 W	4400 MT/s
Xeon® 6369P	3.3 GHz	8	16	24 MB	95 W	4400 MT/s
Xeon® 6357P	3.0 GHz	8	16	24 MB	80 W	4400 MT/s
Xeon® 6353P	2.7 GHz	8	16	24 MB	65 W	4400 MT/s
Xeon® 6349P	3.6 GHz	6	12	18 MB	95 W	4400 MT/s
Xeon® 6337P	3.5 GHz	6	12	18 MB	80 W	4400 MT/s
Xeon® 6333P	3.1 GHz	6	12	18 MB	65 W	4400 MT/s
Xeon® 6325P	3.5 GHz	4	8	12 MB	55 W	4400 MT/s
Xeon® 6315P	2.8 GHz	4	8	12 MB	55 W	4400 MT/s

Intel® Xeon® E-2400 Series / Pentium® Gold						
Model	**CPU Base Frequency**	**Cores**	**Threads**	**Smart Cache**	**Power**	**DDR5**
Xeon® E-2434	3.4 GHz	4	8	12 MB	55W	4400 MT/s
Xeon® E-2414	2.6 GHz	4	4	12 MB	55W	4400 MT/s
Pentium® G7400	3.7 GHz	2	4	6 MB	46W	4400 MT/s

Notes:

- Pentium® G7400 does not comply with Energy Star 4.0.
- For more information regarding Intel® Xeon® processors, please see the following http://www.intel.com/xeon

Chipset

Intel® C262 Chipset
For more information regarding Intel® chipsets, please see the following URL:
http://www.intel.com/products/server/chipsets/

On System Management Chipset

HPE iLO 6 ASIC

Notes:

The HPE iLO remote server management support is now enabled through the shared iLO port default on-board. Customers can access HPE iLO from their browser, command line, or API without the need of the additional module/or activation key. For more information, please contact HPE local customer support. Read and learn more in the HPE iLO QuickSpecs.

Memory	
Type	HPE Standard Memory DDR5 Unbuffered (UDIMM)
DIMM Slots Available	4
Maximum Capacity	128GB (4 x 32GB UDIMM @4400 MT/s) **Notes:** The maximum memory speed is a function of the memory type, memory configuration, and processor model. For details on the HPE Server Memory speed, visit: https://www.hpe.com/psnow/doc/a50010188enw

Memory Protection

- ECC.

Network Controller

Embedded Broadcom BCM5719 Ethernet 1GbE 4-port BASE-T Adapter for HPE

The HPE ProLiant MicroServer Gen11 server offers the customer a 4-port NIC standard with the option to upgrade with a variety of networking options.

Notes: Support document and downloads including firmware and drivers for the Broadcom BCM5719 Ethernet 1GbE 4-port BASE-T LOM Adapter can be downloaded from the supplier's support and services webpage.

Expansion Slots

Expansion Slot #	Technology	Bus Width	Connector Width	Form Factor	Notes
1	PCIe 5.0	x16	x16	Low Profile	
2	PCIe 4.0	x4	x8	Low Profile	

Storage Controller

Intel® VROC SATA Hybrid RAID

Notes: The embedded Intel® Virtual RAID on CPU (Intel® VROC) is the SATA Hybrid RAID controller supported in this server.

- All models feature an embedded storage controller Intel® VROC SATA. Quick Install Guide
- BIOS Default is SATA AHCI. Embedded Intel® SATA VROC is disabled by default. Embedded Intel® SATA VROC can be enabled in BIOS/Platform Configuration (RBSU) for Hybrid RAID features.
- For Linux users, HPE offers a solution that uses in-distro open-source software to create a two-disk RAID 1 boot volume.
- For more information visit: https://downloads.linux.hpe.com/SDR/project/lsrrb/
- RAID support – 0/1/5/10.
- Intel® VROC SATA does not support RAID volume creation with different form factors of drives.
- Intel® VROC SATA RAID supports Windows Server and Linux but does not support VMware.
- Intel® VROC SATA will operate in UEFI mode, Windows OS environment, and Linux OS environment.
- Required to install AMS tools in OS for supporting drives thermal sensor reading for thermal fan control, otherwise may experience acoustic noise impact. Download AMS from the following link.

https://support.hpe.com/hpesc/public/docDisplay?docId=sd00002007en_us&page=GUID-268BA5BF-9524-4D6E-85A5-A7A058A46342.html

- Both Intel® Xeon® E processors and Intel® Pentium® processors support Intel® VROC SATA RAID.
- See HPE Support Center for additional information regarding installation of Intel® VROC (SATA RAID): Enabling Intel® VROC (SATA RAID) for SATA or SATA on BIOS/Platform configuration (RBSU).
  - Windows Edition
  - Linux Edition
- Intel® VROC requires the server boot mode to be set to UEFI Mode.
- Obtain the Intel® VROC downloads (drivers, GUI) specific for your system OS. For direct download links, see the OS-specific VROC guide: https://support.hpe.com/connect/s/product?language=en_US&cep=on&kmpmoid=1013158021&tab=manuals
- Intel® VROC supports RAID management though the following tools:
  - non-OS specific: UEFI System Utilities.
  - Windows: Intel® VROC GUI, Intel® VROC CLI.

Essential RAID Controller

HPE Smart Array E208e-p SR Gen10 Controller.

Performance RAID Controller

HPE MR408i-p Gen11 SPDM Storage Controller.

HPE MR216i-p Gen11 SPDM Storage Controller.

Notes: For additional details, please visit:

- HPE Compute MR Gen11 Controllers QuickSpecs
- HPE Compute SR Gen11 Controllers QuickSpecs

Notes: MicroServer Gen11 supports NHP (non-hot-plug) operations only and hence some of the storage controller functionality may not be supported.

Internal Storage Devices

- **Hard Drives**
  None shipped as standard.
- **Solid State Drives**
  None shipped as standard.

Maximum Internal Storage

- **Non-hot plug SATA**
  16 TB (4 x 4 TB) 3.5" SATA HDD.
  3.84 TB (4x 960 GB) 2.5” SATA SSD.

Notes: The maximum storage indicated is aligned with the current HDD & SSD option list supported. Maximum internal storage supported would change with the server’s option support plan.

Graphics

Integrated Video Standard.
1) Video modes up to 1920 x 1200 @85Hz (16 bpp).
2) 16 MB Video Memory.

HPE iLO 6 On System Management Memory.
3) 32 MB Flash.
4) 8 Gbit DDR 4.

Interfaces

Video	1 Rear VGA port 1 Rear DisplayPort 1.1a
USB 3.2 Gen 1 Type-A Ports	4 total (4 rear)
USB 3.2 Gen 2 Type-A Ports	2 total (2 front)
Network RJ-45 (Ethernet)	4

Notes: If you connect two display devices to the VGA port and DisplayPort, the same image is shown on both devices–screen mirroring mode. The embedded video controller in the iLO 6 chipset does not support dual display or screen extension mode.

Power Supply

One (1) 180 Watts, non-redundant External Power Adapter; or one (1) 330 Watts, non-redundant External Power Adapter.

Server Power Cords

All pre-configured or CTO server models ship standard with one or more country-specific 6 ft./1.83m C5 (supported with the 180W external power adapter) or C13 (supported with the 330W external power adapter) power cords depending on models. Additional power cords are available to be ordered. If a different power cord is required, please check the HPE Power Cords and Cables[1] web page or contact HPE local customer support.
Notes: [1]C5 power cords are not included in the standard HPE Power Cords and Cables specs.

Form Factor

- Ultra Micro Tower.

System Fans

- One (1) non-redundant system fan shipped standard.

Industry Standard Compliance

- ACPI V6.3 Compliant.
- PCIe 5.0 and 4.0 Compliant.
- PXE Support.
- WOL Support.
- EMC Class B.
- Microsoft® Logo certifications.
- VGA Port.
- DP 1.1a.
- SMBIOS 3.2.
- UEFI 2.9.
- Redfish API.
- IPMI 2.0.
- TPM 2.0 Gen11 support.
  Notes: Enabling TPM 2.0 no longer requires TPM module option kit for Gen11. It is an embedded feature.
- Advanced Encryption Standard (AES).
- Triple Data Encryption Standard (3DES) SNMP v3.
- TLS 1.2.
- DMTF Systems Management Architecture for Server Hardware Command Line Protocol (SMASH CLP).
- Active Directory v1.0.
- ASHRAE A3/A4.
  Notes: For additional technical, thermal details regarding ambient temperature, humidity, and feature support, please visit MicroServer Gen11 Extended Ambient Temperature Guidelines
- UEFI (Unified Extensible Firmware Interface Forum).
- USB 3.2 Compliant.
- SATA 6 Gb/s.

Notes: For additional technical thermal details regarding ambient temperatures, humidity and features support please visit URL: http://www.hpe.com/servers/ashrae for ASHRAE A3/A4 feature.

Operating Systems and Virtualization Software Support for ProLiant Servers

- Microsoft Windows Server
- VMware ESXi
  Notes: VMware supported only with Intel® Xeon® E processors, not supported with Intel® Pentium® processors. No Legacy Mode. Support on VMware. https://kb.vmware.com/s/article/84233
- Red Hat Enterprise Linux (RHEL)
- Canonical Ubuntu
- XenServer

Notes: For more information on Hewlett Packard Enterprise Certified and Supported ProLiant Servers for OS and Virtualization Software and latest listing of software drivers available for your server.
https://www.hpe.com/us/en/servers/server-operating-systems.html

HPE Server UEFI ROM

Unified Extensible Firmware Interface (UEFI) is an industry standard that provides better manageability and more secured configuration than the legacy ROM while interacting with your server at boot time. HPE ProLiant Gen11 servers have a UEFI Class 3 implementation to support UEFI mode.

Notes: The UEFI System Utilities function is analogous to the HPE ROM-Based Setup Utility (RBSU) of legacy BIOS. For more information, please visit http://www.hpe.com/servers/uefi.

UEFI enables numerous new capabilities specific to HPE ProLiant servers such as

- Secure Boot and Secure Start enabled for enhanced security.
- Operating system specific functionality.
- Support for larger than 2.2 TB (using GPT) boot drives.
- USB 3.0 Stack.
- Embedded UEFI Shell.
- Mass Configuration Deployment Tool using iLO RESTful API that is Redfish API Conformant.
- PXE boot support for IPv6 networks.
- Workload Profiles for simple performance optimization.

UEFI Boot Mode only

- TPM 2.0 Support.

  Notes: Enabling TPM 2.0 no longer requires TPM module option kit for Gen11. It is an embedded feature.
- iSCSI Software Initiator Support.
- HTTP/HTTPS Boot support as a PXE alternative.
- Boot support for option cards that only support a UEFI option ROM.

  Notes: For UEFI Boot Mode, boot environment and OS image installations should be configured properly to support UEFI.

Embedded Management

HPE Integrated Lights-Out (HPE iLO)
Monitor your servers for ongoing management, service alerting, reporting and remote management with HPE iLO.
Learn more at http://www.hpe.com/info/ilo
Notes:
The HPE iLO remote server management support is now enabled through the shared iLO port default on-board. Customers can access HPE iLO from their browser, command line, or API without the need of the additional module/or activation key. For more information, please contact HPE local customer support.

UEFI
Configure and boot your servers securely with industry standard Unified Extensible Firmware Interface (UEFI).
Learn more at http://www.hpe.com/servers/uefi..

Intelligent Provisioning
Hassle-free server and OS provisioning for 1 or few servers with Intelligent Provisioning.
Learn more at http://www.hpe.com/servers/intelligentprovisioning.

iLO RESTful API
iLO RESTful API is Redfish API conformance and offers simplified server management automation such as configuration and maintenance tasks based on modern industry standards. Learn more at http://www.hpe.com/info/restfulapi

Server Utilities

Active Health System
The HPE Active Health System (AHS) is an essential component of the iLO management portfolio that provides continuous, proactive health monitoring of HPE servers. Learn more at http://www.hpe.com/servers/ahs.

Active Health System Viewer
Use the Active Health System Viewer, a web-based portal, to easily read AHS logs and speed problem resolution with HPE self-repair recommendations, to learn more visit: http://www.hpe.com/servers/ahsv.

Smart Update
Keep your servers up to date with the HPE Smart Update solution by using Smart Update Manager (SUM) to optimize the firmware and driver updates of the Service Pack for ProLiant (SPP). Learn more at http://www.hpe.com/info/smartupdate.

iLO Amplifier Pack
Designed for large enterprise and service provider environments with hundreds of HPE servers, the iLO Amplifier Pack is a free, downloadable open virtual application (OVA) that delivers the power to discover, inventory and update Gen8, Gen9 and Gen10 HPE servers at unmatched speed and scale. Use with an iLO Advanced License to unlock full capabilities.
Learn more at http://www.hpe.com/servers/iLOamplifierpack.

RESTful Interface Tool
RESTful Interface tool is a scripting tool to provision using RESTful API for iLO 6 to discover and deploy servers at scale.
Learn more at http://www.hpe.com/info/resttool.

Scripting Tools
Provision one to many servers using your own scripts to discover and deploy with Scripting Tool (STK) for Windows and Linux or Scripting Tools for Windows PowerShell.
Learn more at http://www.hpe.com/servers/powershell.

HPE OneView Standard
HPE OneView is an on premises, multi-generational server monitoring and management solution. HPE OneView Standard can be used for inventory, health monitoring, alerting, and reporting without additional fees. Customers can upgrade their management experience with an HPE OneView Advanced license, all provided by the same tool. Learn more at
http://www.hpe.com/info/oneview.

HPE Compute Ops Management

Transform compute lifecycle management with a cloud experience that delivers greater simplicity, agility, and speed across your entire server environment, wherever it lives. This software-as-a-service tool provides a dashboard with global visibility and intuitive management of server health, security and compliance status to help you easily identify areas that need immediate attention. Users can update tens to thousands of servers faster through intelligent delta-based firmware downloads and on-demand HPE iLO firmware updates.

HPE Compute Ops Management is cloud-native software that is continually updated with new services, features, patches, and firmware packs. The management application resides in the GreenLake cloud (access via https://common.cloud.hpe.com) and leverages the GreenLake architecture, security, and unified operations.
A 3-year subscription to HPE Compute Ops Management is added by default when ordering an HPE ProLiant Gen11 rack, tower, or micro server.
For more information, visit the HPE Compute Ops Management QuickSpecs:
https://www.hpe.com/psnow/doc/a50004263enw

Security

- UEFI Secure Boot and Secure Start support.
- Immutable Silicon Root of Trust.
- FIPS 140-2 validation.
- Common Criteria certification.
- Configurable for PCI DSS compliance.
- Ability to roll back firmware.
- Secure erase of NAND/User data.
- TPM (Trusted Platform Module) 2.0 Gen 11.
  Notes: Enabling TPM 2.0 no longer requires TPM module option kit for Gen11. It is an embedded feature.
- Front bezel lock feature, standard.
- Padlock slot, standard.
- Kensington Lock slot, standard.
- Power cord clip, standard.

Warranty

This product is covered by a global limited warranty and supported by HPE Services and a worldwide network of Hewlett Packard Enterprise Authorized Channel Partners resellers. Hardware diagnostic support and repair is available for one year from date of purchase. Support for software and initial setup is available for 90 days from date of purchase. Enhancements to warranty services are available through HPE Services operational services or customized service agreements. Hard drives have either a one year or three-year warranty; refer to the specific hard drive QuickSpecs for details.

Notes: MicroServer Gen11 Server Warranty includes 1-Year Parts, 1-Year Labor, 1-Year Onsite support with next business day response. Warranty repairs may be accomplished by Customer Self Repair (CSR) parts. These parts fall into two categories: 1) Mandatory CSR parts are designed for easy replacement. A travel and labor charge will result when customers decline to replace a Mandatory CSR part; 2) Optional CSR parts are also designed for easy replacement but may involve added complexity. Customers may choose to have Hewlett Packard Enterprise replace Optional CSR parts at no charge. Non-CSR parts must be serviced by a trained authorized service engineer. Additional information regarding worldwide limited warranty and technical support is available at: https://www.hpe.com/support/ProLiantServers-Warranties

Server Management

Notes: The HPE iLO remote server management support is now enabled through the shared iLO port default on-board (NIC port#1). Customers can access HPE iLO from their browser, command line, or API without the need of the additional module/or activation key. This is made standard across HPE ProLiant Gen11 Xeon®-E servers. The HPE ML30 Gen11 iLO/NIC/M.2/COM Port Kit (P65741-B21) is now only needed when customers require a dedicated iLO port or if there is the need for additional M.2 slot or the serial port. For more information, please contact HPE local customer support.

iLO Advanced

HPE iLO Advanced licenses offer smart remote functionality without compromise, for all HPE ProLiant servers. The license includes the full integrated remote console, virtual keyboard, video, and mouse (KVM), multi-user collaboration, console record and replay, and GUI-based and scripted virtual media and virtual folders. You can also activate the enhanced security and power management functionality.

HPE OneView Advanced

HPE OneView Advanced offers a sophisticated level of automation to infrastructure management by taking a template driven approach to provisioning, updating, and integrating compute, storage, and networking infrastructure. It builds upon the base features of HPE OpenView Standard, provides full-featured licenses which can be purchased for managing multiple HPE server generations. To learn more visit https://www.hpe.com/info/oneview.

One Config Simple (SCE)

SCE is a guided self-service tool to help sales and non-technical people provide customers with initial configurations in 3 to 5 minutes. You may then send the configuration on for configuration help or use in your existing ordering processes. If you require "custom" rack configuration or configuration for products not available in SCE, please contact Hewlett Packard Enterprise Customer Business Center or an Authorized Partner for assistance.
https://h22174.www2.hpe.com/SimplifiedConfig/Welcome

Service and Support

For the most up-to-date information on HPE Services, please refer to the HPE Services – Supplemental QuickSpecs, which provides a comprehensive and regularly updated overview of available services.

HPE Smart Choice Purchase Program

The HPE Smart Choice purchase program features popular fully configured products that can be quoted in minutes and shipped quickly through HPE Authorized Partners. Products are configured and tested in an HPE factory and stocked at HPE Authorized Distributors and Partners. The products arrive in a single box, making onsite integration easier and more efficient for partners and customers. Additionally, there are aggressively priced HPE Tech Care Services available only through the HPE Smart Choice program when you purchase an HPE Smart Choice product.

For HPE Smart Choice configuration and product details, please visit the Smart Choice Supplemental QuickSpecs: https://www.hpe.com/psnow/doc/a50009219enw

Pre-Configured models ship with the configurations below.

- Options can be selected from the Core or Additional options section of this QuickSpecs.
- Hewlett Packard Enterprise does not allow factory integration of options into pre-configured models. Any additional options purchased will not be shipped inside the server.
- Network Choice models do not include embedded LOM.

Entry Models	
SKU Number	P68819-001 (AMS) P68819-291 (Japan) P68819-371 (APAC) P68819-421 (EMEA) P68819-AA1 (PRC)
Model Name	HPE ProLiant MicroServer Gen11 G7400 2-core VROC 4LFF-NHP 180W External PS Compute Module Server
Processor	G7400 (2 core, 3.7 GHz, 46W)
Number of Processors	One
Memory	16 GB (1x 16 GB, 4400 MT/s)
Network Controller	4x1 GbE embedded
Storage Controller	Embedded Intel® VROC SATA Hybrid RAID **Notes:** Required to install AMS tools in OS for supporting drives thermal sensor reading for thermal fan control, otherwise may experience acoustic noise impact. Download AMS from the following link. https://support.hpe.com/hpesc/public/docDisplay?docId=sd00002007en_us&page=GUID-268BA5BF-9524-4D6E-85A5-A7A058A46342.html
Included Hard Drives	None shipped standard
Internal Storage	Up to 4 LFF NHP HDD or 4 SFF NHP SSD (requiring the optional LFF-to-SFF converter kit, 870213-B21 to be installed. One kit per one drive.)
Optical Drive Bay	Optional ODD Bay Kit, none included
Optical Drive	Optional ODD Bay Kit, none included

Expansion Slots	(1) PCIe 5.0 slot, (1) PCIe 4.0 slot
Power Supply	1x 180W External Power Adapter, Non-Redundant Power Supply
Fans	1x non-redundant system fan ships standard
Management	HPE iLO 6 **Notes:** The HPE iLO remote server management support is now enabled through the shared iLO port default on-board (NIC port#1). Customers can access HPE iLO from their browser, command line, or API without the need of the additional module/or activation key. The HPE ML30 Gen11 iLO/NIC/M.2/COM Port Kit (P65741-B21) shared between ML30 and MicroServer is now only needed when customers require a dedicated iLO port or if there is the need for additional M.2 slot or the serial port. For more information, please contact HPE local customer support.
Security	Embedded TPM (Trusted Platform Module) 2.0 support
Form Factor	Ultra Micro Tower
Warranty	Server warranty includes 1-year parts, 1-year labor, and 1-year onsite support with next business day response. Warranty repairs may be accomplished using Customer Self Repair (CSR) parts. These parts fall into two categories: 1) Mandatory CSR parts are designed for easy replacement. A travel and labor charge will result when customers decline to replace a Mandatory CSR part, 2) Optional CSR parts are also designed for easy replacement but may involve added complexity. Customers may choose to have Hewlett Packard Enterprise replace Optional CSR parts at no charge. 3) A trained, authorized service engineer must service non-CSR parts. For more information, visit https://www.hpe.com/support.

Country Code Key

- -001 = Americas.
- -291 = Japan.
- -371 = Asia Pacific.
- -421 = Europe, the Middle East and Africa.
- -AA1 = China.

Pre-configured Models

Performance Model			
	Performance 1	**Performance 2**	
SKU Number	P68820-001 (AMS) P68820-291 (Japan) P68820-371 (APAC) P68820-421 (EMEA)	P68821-001 (AMS) P68821-421 (EMEA)	P68822-001 (Argentina only)
Model Name	HPE ProLiant MicroServer Gen11 E-2414 2.6GHz 4-core 1P 16GB-U VROC 4LFF-NHP 180W External PS Server	HPE ProLiant MicroServer Gen11 E-2434 4-core 1P 16GB-U VROC 4LFF-NHP 1 TB 180 W External PS Server	
Processor	E-2414 (4 core, 2.8 GHz, 55W)	E-2434 (4 core, 3.4 GHz, 55W)	
Number of Processors	One		
Memory	16 GB (1x 16 GB, 4400 MT/s)		
Network Controller	4x1GbE embedded		
Storage Controller	Embedded Intel® VROC SATA Hybrid RAID **Notes:** Required to install AMS tools in OS for supporting drives thermal sensor reading for thermal fan control, otherwise may experience acoustic noise impact. Download AMS from the following link. https://support.hpe.com/hpesc/public/docDisplay?docId=sd00002007en_us&page=GUID-268BA5BF-9524-4D6E-85A5-A7A058A46342.html		
Included Hard Drives	None shipped standard	1x 1 TB SATA 6G Business Critical 7.2K LFF RW HDD	
Internal Storage	Up to 4 LFF NHP HDD or 4 SFF NHP SSD (requiring the optional LFF-to-SFF converter kit, 870213-B21 to be installed. One kit per one drive.)	1 TB SATA HDD default, upgradeable up to 4TB when additional 1 TB HDDs (HPE 1 TB SATA 7.2K LFF RW MV HDD, 801882-B21) are added.	
Optical Drive Bay	Optional ODD Bay Kit, none included		
Optical Drive	Optional ODD Bay Kit, none included		
Expansion Slots	(1) PCIe 5.0 slot, (1) PCIe 4.0 slot		
Power Supply	1x 180W External Power Adapter, Non-Redundant Power Supply		
Fans	1x non-redundant system fan ships standard		

Management	HPE iLO 6 **Notes:** The HPE iLO remote server management support is now enabled through the shared iLO port default on-board (NIC port#1). Customers can access HPE iLO from their browser, command line, or API without the need of the additional module/or activation key. The HPE ML30 Gen11 iLO/NIC/M.2/COM Port Kit (P65741-B21) shared between ML30 and MicroServer is now only needed when customers require a dedicated iLO port or if there is the need for additional M.2 slot or the serial port. For more information, please contact HPE local customer support.
Security	Embedded TPM (Trusted Platform Module) 2.0 support
Form Factor	Ultra Micro Tower
Warranty	Server warranty includes 1-year parts, 1-year labor, and 1-year onsite support with next business day response. Warranty repairs may be accomplished using Customer Self Repair (CSR) parts. These parts fall into two categories: 1) Mandatory CSR parts are designed for easy replacement. A travel and labor charge will result when customers decline to replace a Mandatory CSR part, 2) Optional CSR parts are also designed for easy replacement but may involve added complexity. Customers may choose to have Hewlett Packard Enterprise replace Optional CSR parts at no charge. 3) A trained, authorized service engineer must service non-CSR parts. For more information, visit https://www.hpe.com/support

Configuration Information

This section lists some of the steps required to configure a Factory Integrated Model. To ensure only valid configurations are ordered, Hewlett Packard Enterprise recommends the use of an HPE approved configurator. Contact your local sales
representative for information on configurable product offerings and requirements.

1. Factory Integrated Models must start with a CTO Server.
2. FIO indicates that this option is only available as a factory installable option.
3. All Factory Integrated Models will be populated with sufficient hard drive blanks based on the number of initial hard drives ordered with the server.
4. Some options may not be integrated at the factory. Contact your local sales representative for additional information.

Step 1: Base Configuration

CTO Server	HPE ProLiant MicroServer Gen11 4LFF Non-hot Plug Configure-to-order Server
SKU Number	P71850-B21
TAA compatible	Yes
Processor Socket	1
DIMM Slots	4
Storage Controller	Embedded Intel® VROC SATA Hybrid RAID; choice of optional PCIe storage controllers.
PCIe expansion slots	2 slots standard: (1) PCIe 5.0 slot, (1) PCIe 4.0 slot
Drive Cage	4 LFF NHP HDD default, choice of optional SFF converter kits to accommodate SFF NHP SSD in LFF drive bays.
Network Controller	HPE embedded 1GbE 4-port BCM5719 network adapter, choice of optional PCIe standup cards
Fan	1 non-hot plug, non-redundant system fan
Management	iLO 6 **Notes:** The HPE iLO remote server management support is now enabled through the shared iLO port default on-board (NIC port#1). Customers can access HPE iLO from their browser, command line, or API without the need of the additional module/or activation key. The HPE ML30 Gen11 iLO/NIC/M.2/COM Port Kit (P65741-B21) shared between ML30 and MicroServer is now only needed when customers require a dedicated iLO port or if there is the need for additional M.2 slot or the serial port. For more information, please contact HPE local customer support.
USB	6 standard: (2) front (4) rear
Security	Embedded TPM 2.0

Step 2: Choose Required Options

Please select one processor required below.

Notes:

- Only one processor is supported.
- DDR5 speed is the maximum memory speed of the processor. Actual memory speed may depend on the quantity and type of DIMMs installed.

Step 2a: Choose Processors

Intel® Xeon® 6300 Series

Intel® Xeon® 6377P 3.1GHz 12-core 95W FIO Processor for HPE	P93292-B21
Intel® Xeon® 6369P 3.3GHz 8-core 95W FIO Processor for HPE	P77162-B21
Intel® Xeon® 6357P 3.0GHz 8-core 80W FIO Processor for HPE	P77163-B21
Intel® Xeon® 6353P 2.7GHz 8-core 65W FIO Processor for HPE	P77164-B21
Intel® Xeon® 6349P 3.6GHz 6-core 95W FIO Processor for HPE	P77165-B21
Intel® Xeon® 6337P 3.5GHz 6-core 80W FIO Processor for HPE	P77166-B21
Intel® Xeon® 6333P 3.1GHz 6-core 65W FIO Processor for HPE	P77167-B21
Intel® Xeon® 6325P 3.5GHz 4-core 55W FIO Processor for HPE	P77168-B21
Intel® Xeon® 6315P 2.8GHz 4-core 55W FIO Processor for HPE	P77169-B21

Intel® Xeon® E-2400 Series

Intel® Xeon® E-2434 3.4GHz 4-core 55W FIO Processor for HPE	P65224-B21
Intel® Xeon® E-2414 2.6GHz 4-core 55W FIO Processor for HPE	P65225-B21

Intel® Pentium® Processor G Series

Intel® Pentium® G7400 3.7GHz 2-core 46W FIO Processor for HPE	P65226-B21

Notes:

- Pentium® G7400 does not comply with Energy Star 4.0.
- For processors above 65W, the HPE MicroServer Gen11 330W External Power Adapter (P77924-B21) must be selected.

Step 2b: Choose Memory Options

Please select one or more memory from below.

Notes:

- HPE memory from previous generation servers is not qualified or warranted with this HPE ProLiant Server.
- HPE Standard Memory (UDIMM) is required to realize the memory performance improvements and enhanced functionality listed in this document for this HPE ProLiant Server.
- The maximum speed capability of the memory system is governed by the combination of the CPU and any other DIMMs installed in the server. If higher speed DIMMs are installed with a CPU that only supports a lower memory speed, the DIMMs will only run at the (lower) memory speed supported by the processor. Likewise, if memory DIMMs are mixed with slower DIMMs within a server, all DIMMs will run at the slower memory speed. For further information please refer to the Memory Population Rules for your specific server.
- With one processor installed, four DIMMs slots are available, two slots per channel. Each channel can be populated with one DIMM (1DPC) or two DIMMs (2DPC).
- The quantity of memory DIMMs selected is recommended to be 1, 2 or 4 for balanced performance.
- Symmetric configurations are required within each channel (e.g., 1R/1R, 2R/2R), meaning the same DIMM capacity (16GB or 32GB) is required when populating within each channel.
- The maximum memory speed is a function of the memory type, memory configuration, and processor model.

– For Server Memory Population Rules for HPE ProLiant Gen11 Servers with Intel® Xeon® 6300-series Processors or Intel® Xeon® E-2400 Processors see details here: http://www.hpe.com/docs/server-memory

Memory

HPE 16GB (1x16GB) Single Rank x8 DDR5-4800 CAS-40-39-39 Unbuffered Standard Memory Kit	P64336-B21
HPE 32GB (1x32GB) Dual Rank x8 DDR5-4800 CAS-40-39-39 Unbuffered Standard Memory Kit	P64339-B21

Notes:

– Running at up to 4400 MT/s with Intel® Xeon® processors when two dual-rank DIMMs are installed in different channels.

– HPE Server Memory compatibility for a specific server platform may vary or be limited within a server platform depending upon the specific configuration being requested. Because each server environment and requirements can vary, memory compatibility is based not only upon the server family but may also be affected by the amount and type of additional hardware options installed within a specific server configuration. For this reason, some HPE memory DIMMs may be qualified for an HPE server model or family and yet occasionally not be supported with some configurations within that server family.

Step 2c: Choose Power Supplies

Select one power adapter from below.

Notes: To review the power requirements for your selected configuration, please use the HPE Power Advisor Tool at https://poweradvisorext.it.hpe.com/?Page=Index

HPE MicroServer Gen11 180W External Power Adapter	P74395-B21
HPE MicroServer Gen11 330W External Power Adapter	P77924-B21

Notes: This larger watt power adapter is designed to support configurations which contain higher power options, for example, processors above 65W.

Step 3: Choose additional options for Factory Integration from Additional Options sections below.

Notes: Some options may not be integrated at the factory. To ensure only valid configurations are ordered, Hewlett Packard Enterprise recommends the use of an HPE approved configurator. Contact your local sales representative for additional information.

HPE Unique Options

HPE ProLiant ML30 Gen11 iLO/NIC/M.2/COM Port Kit P65741-B21

Notes: Install the multifunction dedicated iLO-M.2-serial module shared between ML30 Gen11 and MicroServer Gen11 servers to get the following:

- Dedicated iLO port.
- M.2 Slot for M.2 SSD support.
- Serial Port.

Notes: This kit does not contain the M.2 SSD. It must be ordered separately.

HPE ProLiant MicroServer Gen11 Controller Cable Kit P68413-B21

Notes: This kit works with HPE internal storage controller. It must be selected if MR216i-p or MR408i-p is in the configuration.

HPE MicroServer Gen10 SFF Converter Kit 870213-B21

Notes: This kit works to accommodate the SFF NHP SSD into the LFF NHP drive bay.
If SFF drives are selected, then SFF Converter kit must be selected and defaulted.
Number of SFF drives selection must match with number of SFF converter kit.

HPE MicroServer Gen11 Wall Mount Kit P69315-B21

Notes: This kit works to mount the server on a brick/concrete wall or wooden wall. The option kit does not support mounting on a drywall. Also, the mounting surface MUST support at least five times the combined weight of the server and the wall mounting hardware. *IMPORTANT: DO NOT install the wall mount where this weight cannot be supported. Make sure you read the usage information to find out more if this kit works in your environment. For more detail, refer to HPE Service Center (HPESC) at https://support.hpe.com/hpesc/public/home/signin or UG (User Guide) at https://support.hpe.com/hpesc/public/docDisplay?docId=sd00003930en_us&page=GUID-ECB17AD0-D417-4423-8953-388D17BBFB94.html&docLocale=en_US.
To select this kit on OCA, please add the part number via Ad Hoc when configuring a CTO server.

HPE Hard Disk Drives

Business Critical (Entry) 6G SATA - LFF NHP/Raw Drives

HPE 1TB SATA 6G Business Critical 7.2K LFF RW 1-year Warranty Multi Vendor HDD 801882-B21

HPE 4TB SATA 6G Business Critical 7.2K LFF RW 1-year Warranty Multi Vendor HDD 801888-B21

Notes: Please see the HPE Hard Drives QuickSpecs for Technical Specifications and additional information.
Max = 4

HPE Solid State Drives

HPE 480GB SATA 6G Read Intensive SFF RW Multi Vendor SSD P65272-B21

HPE 960GB SATA 6G Read Intensive SFF BC Multi Vendor SSD P40498-B21

Notes: To accommodate an SSD, HPE MicroServer Gen10 NHP SFF Converter Kit (870213-B21) must be used/selected.
Max Qty = 4
Number of SFF drives selection must match with the number of SFF Converter Kit
If SFF Converter kit is selected, then LFF Drives cannot be selected and vice versa.
If the new SFF drive has its own carrier (for instance, in P40496-B21 and P40498-B21 where HPE Basic Carrier, shown as "BC" in the product description, is included), remove the carrier before installing it in the converter kit.
Notes: P40496-B21 and P40498-B21 are supported as customer upgradeable options in MicroServer Gen11. They are NOT to be selected in a CTO configuration.

HPE Networking

10 Gigabit Ethernet Adapter

Broadcom BCM57416 Ethernet 10Gb 2-port BASE-T Adapter for HPE P26253-B21

Broadcom BCM57412 Ethernet 10Gb 2-port SFP+ Adapter for HPE P26259-B21

1 Gigabit Ethernet Adapter

Broadcom BCM5719 Ethernet 1Gb 4-port BASE-T Adapter for HPE P51178-B21

Intel® I350-T4 Ethernet 1Gb 4-port BASE-T Adapter for HPE P21106-B21

Notes: If Customer uses the OS RHEL 8.4 on Broadcom adapter (P26259-B21) they will need to download the driver from the following links.

- https://support.hpe.com/connect/s/softwaredetails?language=en_US&softwareId=MTX_91bef687f7694f3aa51a5e6277
- https://support.hpe.com/connect/s/softwaredetails?language=en_US&softwareId=MTX_579d5cde4cef4d108f24a326ff

HPE Computation and Graphics Accelerators

NVIDIA RTX A400 4GB PCIe Low Profile Bracket Accelerator for HPE S7U71C

Notes:
"For best performance across common workloads, HPE recommends system main memory at least twice the memory of all GPU.""
RTX A400 GPU must be installed only on the PCIe Slot 1

HPE Storage Controllers

The HPE Gen10 and Gen11 storage controller naming framework is shown as depicted below:

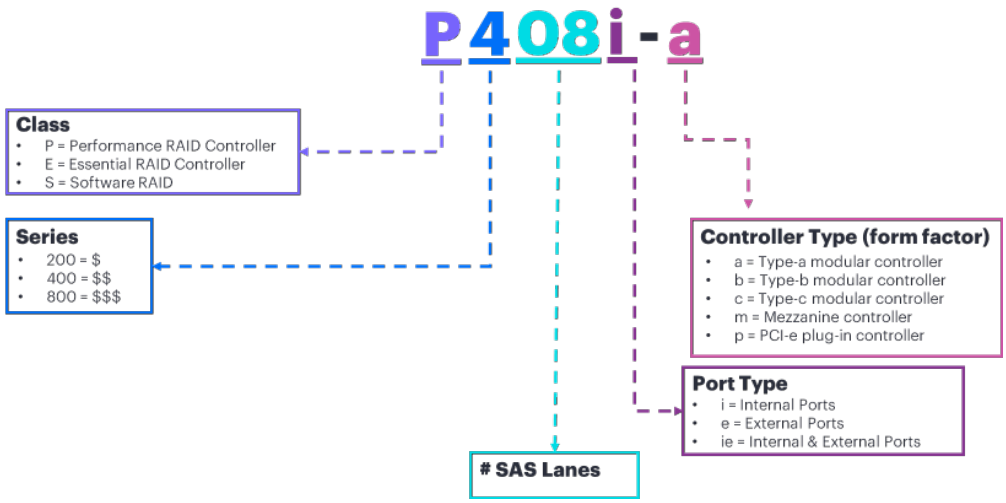

Gen10 storage controller naming framework

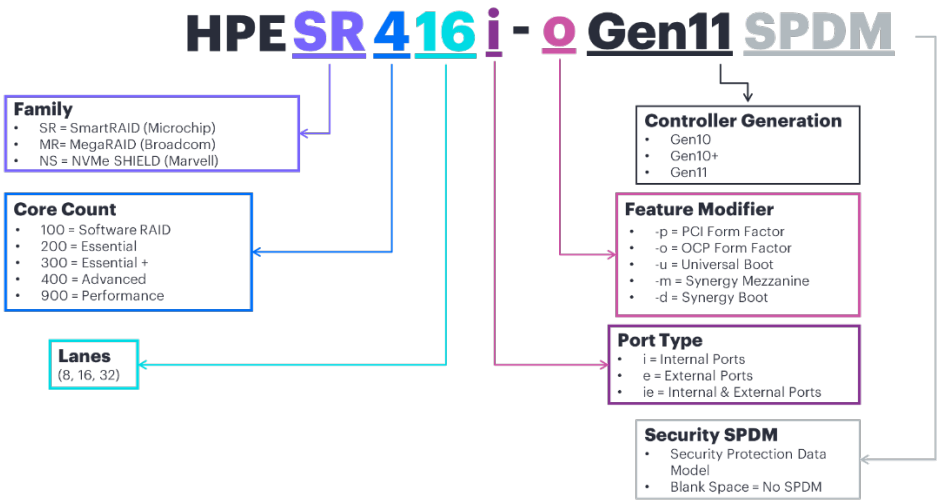

Gen11 storage controller naming framework

The Gen11 storage controller portfolio has been updated to include new technology. For a more detailed breakout of the available Gen11 controllers visit the storage controllers QuickSpecs sites:

- HPE Compute MR Gen11 Controllers QuickSpecs
- HPE Compute SR Gen11 Controllers QuickSpecs

Notes: MicroServer Gen11 supports NHP (non-hot-plug) operations only and hence some of the storage controller functionality may not be supported.

Essential RAID Controllers

HPE Smart Array E208e-p SR Gen10 (8 External Lanes/No Cache) 12G SAS PCIe Plug-in Controller 804398-B21

HPE Tri-Mode Controllers

HPE MR216i-p Gen11 x16 Lanes without Cache PCI SPDM Plug-in Storage Controller P47785-B21

Notes: When this storage controller is in the configuration, HPE MicroServer Gen11 Controller Cable Kit (P68413-B21) must be selected.

HPE MR408i-p Gen11 x8 Lanes 4GB Cache PCI SPDM Plug-in Storage Controller P74775-B21

Notes:

- When this storage controller is in the configuration, HPE MicroServer Gen11 Controller Cable Kit (P68413-B21) must be selected.
- When MR408i-p controller is selected, then HPE 96W Smart Storage Battery 260mm Cable (P01367-B21) or must be selected.

HPE Energy Packs

HPE 96W Smart Storage Lithium-ion Battery with 260mm Cable Kit P01367-B21

Notes:

- Provides backup power for HPE Smart Array controllers. Required when MR408i-p is selected, which is a performance RAID controller.
- As max storage battery quantity to be one per MicroServer Gen11 server, HPE 96W Smart Storage Battery 260mm Cable (P01367-B21) must be selected. They cannot be selected together.

Embedded Management

HPE Ilo Advanced

HPE iLO Advanced 1-server License with 1yr Support on iLO Licensed Features 512485-B21

HPE iLO Advanced AKA Tracking License with 1yr Support on iLO Licensed Features 512487-B21

HPE iLO Advanced Electronic License with 1yr Support on iLO Licensed Features E6U59ABE

HPE iLO Advanced Electronic License with 3yr Support on iLO Licensed Features E6U64ABE

HPE iLO Advanced 1-server License with 3yr Support on iLO Licensed Features BD505A

HPE iLO Advanced AKA Tracking License with 3yr Support on iLO Licensed Features BD507A

Software as a Service Management

HPE Compute Ops Management

HPE Compute Ops Management Advanced 1-year Upfront ProLiant SaaS S5E58AAE

HPE Compute Ops Management Advanced 3-year Upfront ProLiant SaaS S5E59AAE

HPE Compute Ops Management Advanced 5-year Upfront ProLiant SaaS S5E60AAE

HPE Compute Ops Management Advanced 7-year Upfront ProLiant SaaS S5E61AAE

HPE Compute Ops Management Standard 7-year Upfront ProLiant SaaS S2E10AAE

HPE Compute Ops Management Advanced Flex with ProLiant Enablement S6C28AAE

HPE Security

HPE ProLiant MicroServer Gen11 Server ships with embedded Trusted Platform Module (TPM) 2.0 enabled by default.

HPE USB Options

HPE Optical Drives

HPE Mobile USB DVD-RW Optical Drive	701498-B21

HPE Power Cords

C5 Power Cords

HPE C5 125V 7Amp Black 1.83m US/CA Power Cord	P86414-B21
HPE C5 250V 2.5Amp Black 1.8m UK/HK/SG/MY Power Cord	P86430-B21
HPE C5 250V 2.5Amp Black 1.83m AU/NZ Power Cord	P86415-B21
HPE C5 250V 2.5Amp Black 1.8m EU/RU/KR Power Cord	P86416-B21
HPE C5 250V 2.5Amp Black 1.8m IN Power Cord	P86417-B21
HPE C5 110V 7Amp Black 1.83m JP Power Cord	P86418-B21
HPE C5 250V 2.5Amp Black 1.8m CN Power Cord	P86419-B21
HPE C5 125V 2.5Amp Black 1.8m TW Power Cord	P86420-B21
HPE C5 250V 2.5Amp Black 1.83m TH/PH Power Cord	P86421-B21
HPE C5 250V 2.5Amp Black 1.83m AR Power Cord	P86422-B21
HPE C5 250V 2.5Amp Black 1.83m BR Power Cord	P86423-B21
HPE C5 250V 2.5Amp Black 1.83m IT/CH Power Cord	P86424-B21
HPE C5 250V 2.5Amp Black 1.83m DK Power Cord	P86425-B21
HPE C5 250V 2.5Amp Black 1.83m CH Power Cord	P86426-B21
HPE C5 250V 2.5Amp Black 1.83m KR Power Cord	P86427-B21
HPE C5 250V 2.5Amp Black 1.8m ZA Power Cord	P86428-B21
HPE C5 250V 2.5Amp Black 1.8m IL Power Cord	P86429-B21

Notes:

- At least 1 Region-specific power cord is included by default with the server configuration to meet standard deployment requirements. The power cords listed here are additional optional accessories, intended to provide flexibility for specialized use cases or customer-specific preferences.
- This C5 optional power cord is supported only with the 180W External Power Adapter.
- Maximum of five power cords

HPE Standard Memory

HPE Standard Memory offers the best combination of pricing, quality, reliability and compatibility for HPE ProLiant servers; designed to help your business achieve powerful results with right-sized affordable solutions. It delivers the ideal value that small businesses require to smoothly run a small network server environment and provides entry-level businesses while being affordable.

HPE Standard Memory UDIMMs has passed the rigorous Hewlett Packard Enterprise qualification and testing processes. The memory subsystem in this server supports UDIMMs. The server supports single-rank and dual-rank DDR5 UDIMMs operating at up to 4400 MT/s DIMM speeds

Memory Population Guidelines

The server supports two channels per processor with two DIMMs per channel for a total of four DIMMs per MicroServer Gen11 Server.

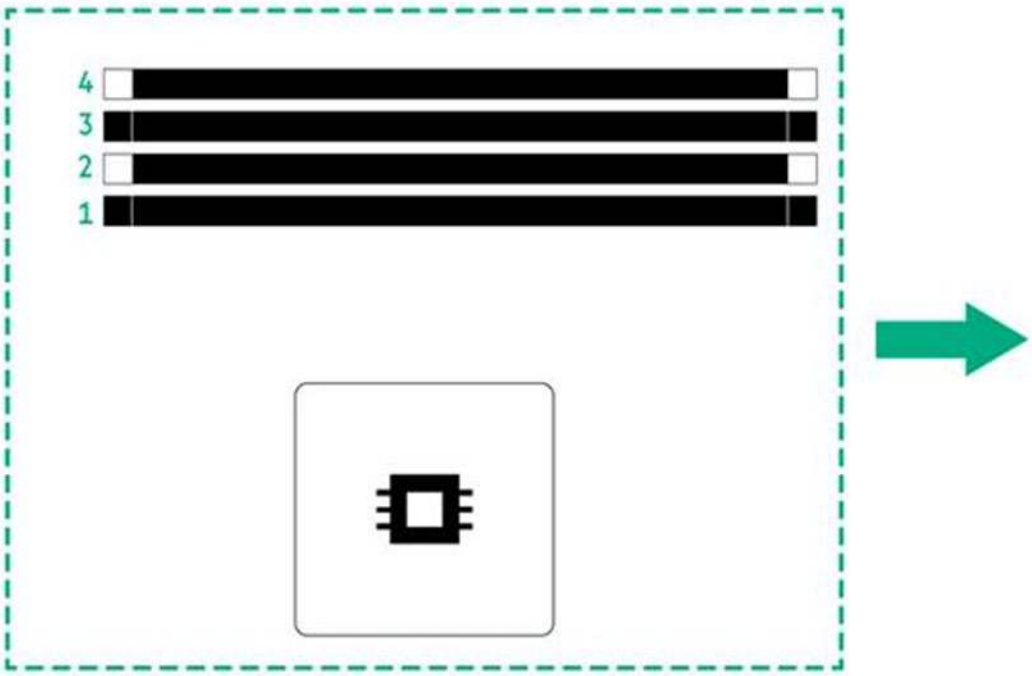

CPU 1		
	Slot #	**Population Order**
Channel 2	4	B
	3	D
Channel 1	2	A
	1	C

General Memory Population Rules and Guidelines:

- The HPE ProLiant MicroServer Gen11 Server has four memory slots.
- Only ECC UDIMMs are supported on MicroServer Gen11. No support for non-ECC UDIMMs.
- Memory speed support depends on the type of processor installed. For more information, see the technical specification of the installed processor.

Memory

- The server supports up to 4400 MT/s ECC UDIMMs (Unbuffered DIMMs).
- The server supports up to 128GB (4 x 32 GB) UDIMMs.
- Population order; start with "A" first, "B" second, "C" third, etc.
- The server does not support Non-ECC UDIMMs, RDIMMs, and LRDIMMs
- Mixing memory DIMMs of different capacities in the server is not recommended.
- Always use HPE qualified DIMMs.
- For Server Memory Population Rules for HPE ProLiant Servers with Intel® Xeon® 6300-series Processors or Intel® Xeon® E-2400 Processors see details here: http://www.hpe.com/docs/server-memory
- For details on the HPE Server Memory Options Population Rules, visit: http://www.hpe.com/docs/memory-population-rules
- To realize the performance memory capabilities listed in this document, HPE DDR5 Smart Memory is required. For additional information, please see the HPE DDR5 Smart Memory QuickSpecs.

Notes:

- The maximum memory speed is a function of the memory type, memory configuration, and processor model.
- For details on the HPE Server Memory speed, visit: https://www.hpe.com/docs/server-memory
- HPE Server Memory compatibility for a specific server platform may vary or be limited within a server platform depending upon the specific configuration being requested. Because each server environment and requirements can vary, memory compatibility is based not only upon the server family but may also be affected by the amount and type of additional hardware options installed within a specific server configuration. For this reason, some HPE memory DIMMs may be qualified for an HPE server model or family and yet occasionally not be supported with some configurations within that server family.

DIMM Type	Unbuffered with ECC DIMMs (UDIMMs)	
HPE SKU P/N	**P64336-B21**	**P64339-B21**
SKU Description	HPE 16GB (1x16GB) Single Rank x8 DDR5-4800 CAS-40-39-39 Unbuffered Standard Memory Kit	HPE 32GB (1x32GB) Dual Rank x8 DDR5-4800 CAS-40-39-39 Unbuffered Standard Memory Kit
DIMM Rank	Single Rank (1R)	Dual Rank (2R)
DIMM Capacity	16 GB	32 GB
Voltage	Standard Voltage 1.1 V VDDQ, 1.8 V VPP	Standard Voltage 1.1 V VDDQ, 1.8 V VPP
CAS Latency	36-36-36	36-36-36
DIMM Native Speed (MT/s)	5600 MT/s	5600 MT/s
Slots That Can Be Populated	4	4
Maximum Capacity (Gb)	64 GB (4x16 GB)	128 GB (4x32 GB)
HPE Server Memory Speed: Intel® Xeon® E processors		
1 DIMM Per Channel	4400 MT/s	4400 MT/s
2 DIMM Per Channel	4000 MT/s	3600 MT/s
HPE Server Memory Speed: Intel® Pentium® G7400 processor		
1 DIMM Per Channel	4400 MT/s	4400 MT/s
2 DIMM Per Channel	4000 MT/s	3600 MT/s

DDR5 memory options part number decoder

Capacity references are rounded to the common gigabyte (GB) values.

- 16 GB = 16,384 MB.
- 32 GB = 32,768 MB.
- 64 GB = 65,536 MB.
- 128 GB = 131,072 MB.

For more information on memory, please visit the HPE DDR5 Standard Memory web site.

Notes:

The -B21 memory SKUs shown in this document are to be used when ordering stand-alone memory only. For each -B21 SKU, there is a corresponding -F21 SKU which is to be used when configuring servers with integrated memory DIMMs.

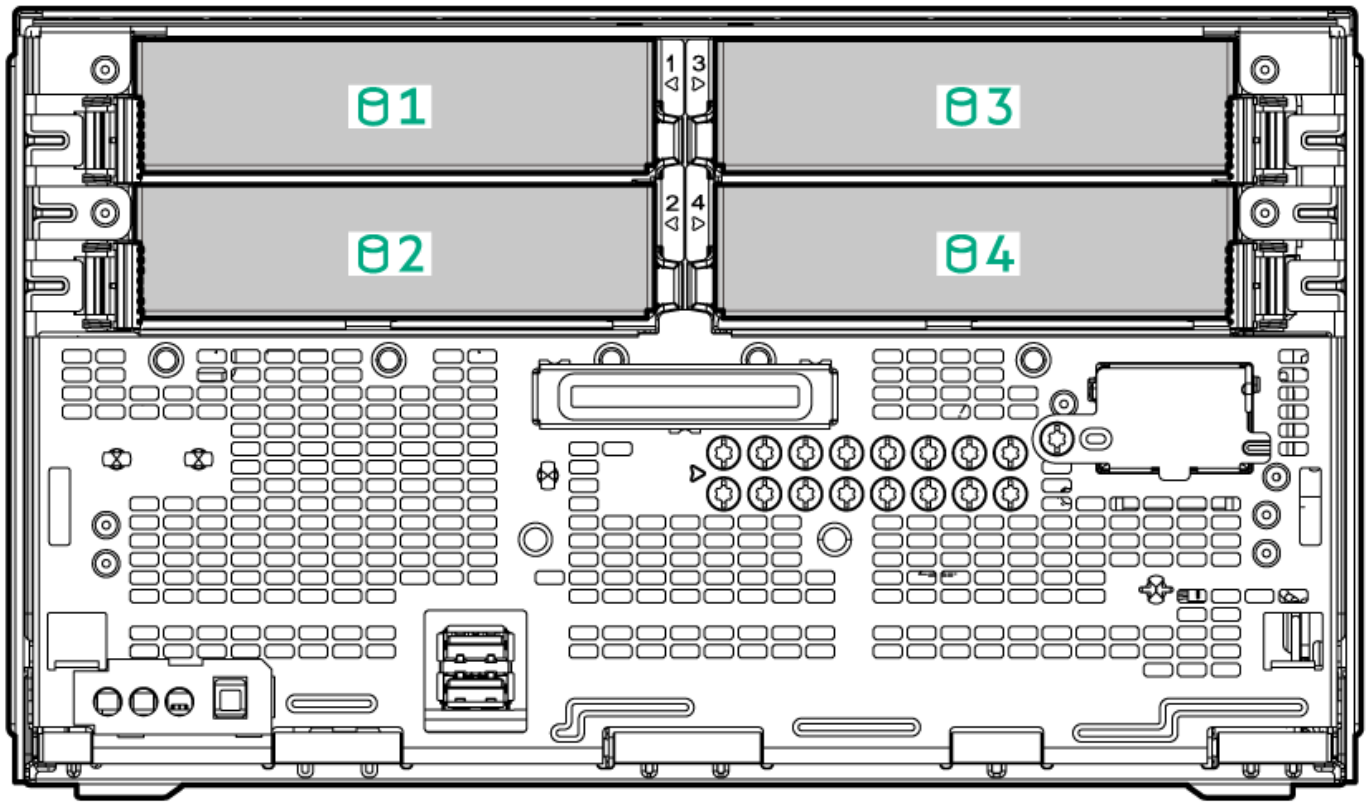

1-4 Four (4) non-hot plug drive bays

Drive Support			
Drive	**Quantity Supported**	**Position Supported**	**Controller**
NHP SATA SSD	4	1-4	VROC SR
NHP SATA HDD	4	1-4	VROC SR

System Unit

Dimensions

- **(H x W x D) (with feet)**
  6.06 x 10.28 x 9.82 in (15.4 x 26.1 x 24.9 cm).

Weight (approximate)

- **Maximum** (Four drives, four DIMMs, expansion board + iLO Enablement Kit)
  19.07 lb. (8.65 kg).
- **Minimum** (One DIMM installed, one drive, expansion board, iLO Enablement Kit)
  18.78 lb. (8.52 kg).

Input Requirements (per power supply)

- **Rated Line Voltage**
  100 VAC to 240 VAC.
- **Rated Input Current**
  2.5 A (at 90 VAC).
- **Rated Input Frequency**
  50 to 60 Hz.
- **Rated Input Power**
  180 W Power Supply.

Power Specifications

To review typical system power ratings, use the Power Advisor which is available via the online tool located at URL: https://www.hpe.com/us/en/integrated-systems/rack-power-cooling.html

Power Supply Output (per power supply)

- **Rated Steady-State Power**
  180 W Power Supply.
  180 W (at 100 VAC).
  180 W (at 200 VAC).
- **Maximum Peak Power**
  180 W Power Supply.
  180 W (at 100 VAC).
  180 W (at 200 VAC).

Relative Humidity (non-condensing)

- **Operating**
  8% to 90% relative humidity (Rh), 28°C maximum wet bulb temperature, non-condensing.
- **Non-operating**
  5 to 95% relative humidity (Rh), 38.7°C (101.7°F) maximum wet bulb temperature, non-condensing.

Altitude

- **Operating**
  3050 m (10,000 ft.). This value may be limited by the type and number of options installed. The maximum allowable altitude change rate is 457 m/min (1500 ft./min).
- **Non-operating**
  9144 m (30,000 ft.). Maximum allowable altitude change rate is 457 m/min (1500 ft./min).

System Inlet Temperature

- **Standard Operating Support**
  10° to 35°C (50° to 95°F) at sea level with an altitude derating of 1.0°C per every 305 m (1.8°F per every 1000 ft.) above sea level to a maximum of 3050 m (10,000 ft.), no direct sustained sunlight. Maximum rate of change is 20°C/hr. (36°F/hr.). The upper limit and rate of change may be limited by the type and number of options installed.
  System performance during standard operating support may be reduced if operating above 30°C (86°F).
- **Extended Ambient Operating Support**
  For approved hardware configurations, the supported system inlet range is to be: 5° to 10°C (41° to 50°F) and 35° to 40°C (95° to 104°F) at sea level with an altitude derating of 1.0°C per every 175 m (1.8°F per every 574 ft.) above 900 m (2953 ft.) to a maximum of 3050 m (10,000 ft.). The approved hardware configurations for this system are listed at the URL: http://www.hpe.com/servers/ashrae
  For approved hardware configurations, the supported system inlet range is to be: 40° to 45°C (104° to 113°F) at sea level with an altitude derating of 1.0°C per every 125 m (1.8°F per every 410 ft.) above 900 m (2953 ft.) to a maximum of 3050 m (10,000 ft.). The approved hardware configurations for this system are listed at the URL: http://www.hpe.com/servers/ashrae

  System performance may be reduced if operating in the ambient operating range.
- **Non-operating**
  -30°C to 60°C (-22°F to 140°F) Maximum rate of change is 20°C/hr. (36°F/hr.).

Acoustic Noise

Listed are the declared A-Weighted sound power levels (LWA,m), declared average bystander position A-Weighted sound pressure levels (LpAm) and the statistical adder for verification, Kv, is a quantity to be added to the declared mean A-weighted sound power level, LWA,m when the product is operating in a 23°C ambient environment. Noise emissions were measured in accordance with ISO 7779 (ECMA 74) and declared in accordance with ISO 9296 (ECMA 109). The listed sound levels apply to standard shipping configurations. Additional options may result in increased sound levels. Please have your HPE representative provide information from the HPE EMESC website for further technical details regarding the configurations listed below.

Idle	
LWAd	3.4 Bels (Entry) 3.4 Bels (Performance 1) 3.4 Bels (Performance 2)
LpAm	24 dBA (Entry) 24 dBA (Performance 1) 24 dBA (Performance 2)
Kv	0.4 Bels (Entry) 0.4 Bels (Performance 1) 0.4 Bels (Performance 2)
Operating	
LWAd	3.4 Bels (Entry) 3.4 Bels (Performance 1) 3.4 Bels (Performance 2)
LpAm	24 dBA (Entry) 24 dBA (Performance 1) 24 dBA (Performance 2)
Kv	0.4 Bels (Entry) 0.4 Bels (Performance 1) 0.4 Bels (Performance 2)

Notes:

- The declared mean A-weighted sound power level, LWA,m, is computed as the arithmetic average of the measured.
- A-weighted sound power levels for a randomly selected sample, rounded to the nearest 0,1 B.
- The declared mean A-weighted emission sound pressure level, LpA,m, is computed as the arithmetic average of the measured A-weighted emission sound pressure levels at the bystander positions for a randomly selected sample, rounded to the nearest 1 dB.
- The statistical adder for verification, Kv, is a quantity to be added to the declared mean A-weighted sound power level, LWA,m, such that there will be a 95 % probability of acceptance, when using the verification procedures of ISO 9296, if no more than 6,5 % of the batch of new equipment, has A-weighted sound power levels greater than (LWA,m + Kv).
- The quantity, LWA,c (formerly called LWAd), can be computed from the sum of LWA,m and Kv.
- All measurements made to conform to ISO 7779 / ECMA-74 and declared to conform to ISO 9296 / ECMA-109.
- B, dB, abbreviations for bels and decibels, respectively, where 1 B = 10 dB.

- The results in this declaration apply only to the model numbers listed above when operating and tested according to the indicated modes and standards. A system with additional configuration components or increased operating functionality may increase the noise emission values.
- The listed sound levels apply to standard shipping configurations defined as per the legacy WW BTO model plan. Additional options may result in increased sound levels, for example, higher power processors (>65W), additional graphic processing units (GPU), SSDs or NVMe M.2.
- For more information, please refer to Acoustics Guidelines for HPE ProLiant MicroServer Gen11 Server or at https://support.hpe.com/hpesc/docDisplay?docId=dp00005840en_us

Emissions Classification (EMC)

- **FCC Rating**
  Class B
- **Normative Standards**
  CISPR32, EN55032, EN55024.FCC CFR 47, Pt15; ICES-003; CNS13438; GB9254, K32; K24; EN61000-3-2;EN61000-3-3;

Notes: Product conformance to cited product specifications is based on sample (type) testing, evaluation, or assessment. This product or family of products is eligible to bear the appropriate compliance logos and statements.

Environmentally friendly Products and Approach End-of-life Management and Recycling

Hewlett Packard Enterprise offers end-of-life product return, trade-in, and recycling programs, in many geographic areas, for our products. Products returned to Hewlett Packard Enterprise will be recycled, recovered or disposed of in a responsible manner.

The European Union Waste Electrical and Electronic Equipment Directive [EU WEEE] (2002/95/EC) requires manufacturers to provide treatment information for each product type for use by treatment facilities. This information (product disassembly instructions) is posted on the Hewlett Packard Enterprise web site. These instructions may be used by recyclers and other WEEE treatment facilities as well as Hewlett Packard Enterprise OEM customers who integrate and re-sell Hewlett Packard Enterprise equipment.

Summary of Changes

Date	Version History	Action	Description of Change
03-Aug-2026	Version 16	Changed	Standard Features and Core Options sections were updated.
		Added	Intel Xeon 6377P Processor.
06-Apr-2026	Version 15	Changed	Standard Features and Additional Options sections were updated.
		Added	Memory F21 rules and HPE Computation and Graphics Accelerators SKUs.
02-Mar-2026	Version 14	Changed	Service and Support and Additional Options sections were updated.
		Added	Updated GreenLake statement.
		Removed	HPE Solid State Drives and HPE M.2 Drives obsolete SKUs.
08-Dec-2025	Version 13	Changed	Additional Options section was updated.
		Added	HPE Power Cords SKUs were added.
02-Sep-2025	Version 12	Changed	Standard Features section was updated.
		Added	Quick Install Guide was added.
28-Jul-2025	Version 11	Changed	Updated survey link.
05-May-2025	Version 10	Changed	Overview, Standard Features, Configuration Information, Additional Options and Technical Specifications sections were updated. Added: Software as a Service Management Enablement SKU (COM Option), Power Cord, Storage Controller and System Acoustics Specs.
07-Apr-2025	Version 9	Changed	Overview, Standard Features, Configuration Information and Additional Options sections were updated. Added: Storage Controller SKU, Power Adapter SKU, COM Advanced SKUs and QuickSpecs Survey. Removed: HPE RDX SKUs.
24-Feb-2025	Version 8	Changed	Overview, Standard Features, Configuration Information and Additional Options sections were updated. (Intel® Xeon® 6300 processors added, service/warranty updated to one-year, Intel® VROC Software RAID naming changed to Hybrid RAID)
10-Dec-2024	Version 7	Changed	Overview, Standard Features, Optional Features, Pre-Configured Models, Configuration Information, and Technical Specifications sections were updated. (iLO support updated – remote sever mgmt. is now enabled thru the on-board shared iLO port without the need of the additional module. Operating Systems matrix updated)
02-Dec-2024	Version 6	Changed	Overview, Pre-Configured Models and Additional Options sections were updated. (New storage controller added, BTO SKU list revised. KB/M section removed)
21-Oct-2024	Version 5	Changed	Additional Options section was updated. (Revised the remark to BC SSDs and the wall mount kit.)
16-Sep-2024	Version 4	Changed	Overview, Pre-Configured Models and Configuration Information Sections were updated.
03-Sep-2024	Version 3	Changed	Overview, Standard Features (Operating Systems and Virtualization Software Support for HPE Servers), Pre-Configured Models (TPM and Smart Choice) and Configuration Information sections were updated.
05-Aug-2024	Version 2	Changed	Pre-Configured Models section was updated. (TPM China).
3-Jun-2024	Version 1	New	New QuickSpecs.

Have feedback on QuickSpecs? We're listening

Chat now

© Copyright 2026 Hewlett Packard Enterprise Development LP. The information contained herein is subject to change without notice. The only warranties for Hewlett Packard Enterprise products and services are set forth in the express warranty statements accompanying such products and services. Nothing herein should be construed as constituting an additional warranty. Hewlett Packard Enterprise shall not be liable for technical or editorial errors or omissions contained herein.

Intel® and Xeon® are registered trademarks of Intel® Corporation in the U.S. and other countries.
Microsoft®, Windows®, and Windows Server® are U.S. registered trademarks of the Microsoft group of companies.

a50007028enw - 17138 - Worldwide - V16 - 03-August-2026
HEWLETT PACKARD ENTERPRISE
HPE.com