RETIRED: This document has been officially retired, and the base products listed herein are now considered obsolete and are no longer available for sale. Consequently, the information contained within may no longer be current. This document is provided exclusively for reference and informational purposes.

Overview

HPE SmartMemory

Is finding reliable DRAM memory for your HPE ProLiant Server series in your data center a major challenge?

When you choose HPE SmartMemory you get the same high quality, reliability, and confidence that come with your HPE ProLiant Gen8 Server series. DRAM quality and reliability are more important now than ever. Industry trends such as server virtualization, cloud computing, the use of large database applications and high-performance computing have all increased the need for higher capacity memory with greater reliability and uptime. HPE SmartMemory is unique technology introduced for ProLiant Gen8 Servers that unlocks certain features available only with HPE Qualified Server memory. HPE SmartMemory enables ProLiant Gen8 systems to reliably identify and verify whether installed memory has passed the rigorous HPE qualification and testing processes. And because the memory is authenticated, extended memory performance features can be enabled through the system ROM.

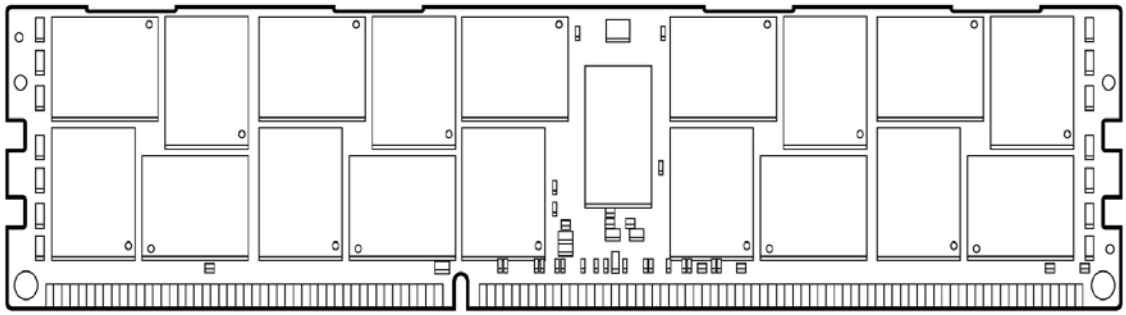

What's New

- HPE SmartMemory 64GB @1600 Memory option kit supported on DL580 Gen 8 Servers
- HPE SmartMemory RDIMM operates at 1333MHz @3DPC

Models

Memory for Intel Servers

Registered DIMMs (RDIMMs)

HPE 4GB (1x4GB) Single Rank x4 PC3L-12800R (DDR3-1600) Registered CAS-11 Low Voltage Memory Kit	713981-B21
HPE 4GB (1x4GB) Single Rank x4 PC3-14900R (DDR3-1866) Registered CAS-13 Memory Kit	708637-B21
HPE 8GB (1x8GB) Dual Rank x4 PC3L-12800R (DDR3-1600) Registered CAS-11 Low Voltage Memory Kit	713983-B21
HPE 8GB (1x8GB) Single Rank x4 PC3L-12800R (DDR3-1600) Registered CAS-11 Low Voltage Memory Kit	731765-B21
HPE 8GB (1x8GB) Dual Rank x4 PC3-14900R (DDR3-1866) Registered CAS-13 Memory Kit	708639-B21
HPE 8GB (1x8GB) Single Rank x4 PC3-14900R (DDR3-1866) Registered CAS-13 Memory Kit	731761-B21
HPE 16GB (1x16GB) Dual Rank x4 PC3L-12800R (DDR3-1600) Registered CAS-11 Low Voltage Memory Kit	713985-B21
HPE 16GB (1x16GB) Dual Rank x4 PC3-14900R (DDR3-1866) Registered CAS-13 Memory Kit	708641-B21
HPE 24GB (1x24GB) Three Rank x4 PC3L-10600R (DDR3-1333) Registered CAS-9 Low Voltage Memory Kit	761501-B21
HPE 4GB (1x4GB) Single Rank x4 PC3L-10600R (DDR3-1333) Registered CAS-9 Low Voltage Memory Kit	647893-B21
HPE 4GB (1x4GB) Single Rank x4 PC3-12800R (DDR3-1600) Registered CAS-11 Memory Kit	647895-B21
HPE 8GB (1x8GB) Dual Rank x4 PC3L-10600R (DDR3-1333) Registered CAS-9 Low Voltage Memory Kit	647897-B21
HPE 8GB (1x8GB) Single Rank x4 PC3-12800R (DDR3-1600) Registered CAS-11 Memory Kit	647899-B21
HPE 8GB (1x8GB) Dual Rank x4 PC3-12800R (DDR3-1600) Registered CAS-11 Memory Kit	690802-B21
HPE 16GB (1x16GB) Dual Rank x4 PC3L-10600R (DDR3-1333) Registered CAS-9 Low Voltage Memory Kit	647901-B21
HPE 16GB (1x16GB) Dual Rank x4 PC3-12800R (DDR3-1600) Registered CAS-11 Memory Kit	672631-B21

Overview

Unbuffered with ECC DIMMs (UDIMMs)

HPE 2GB (1x2GB) Single Rank x8 PC3L-12800E (DDR3-1600) Unbuffered CAS-11 Low Voltage Memory Kit	713975-B21
HPE 2GB (1x2GB) Single Rank x8 PC3-14900E (DDR3-1866) Unbuffered CAS-13 Memory Kit	708631-B21
HPE 4GB (1x4GB) Dual Rank x8 PC3L-12800E (DDR3-1600) Unbuffered CAS-11 Low Voltage Memory Kit	713977-B21
HPE 4GB (1x4GB) Dual Rank x8 PC3-14900E (DDR3-1866) Unbuffered CAS-13 Memory Kit	708633-B21
HPE 8GB (1x8GB) Dual Rank x8 PC3L-12800E (DDR3-1600) Unbuffered CAS-11 Low Voltage Memory Kit	713979-B21
HPE 8GB (1x8GB) Dual Rank x8 PC3-14900E (DDR3-1866) Unbuffered CAS-13 Memory Kit	708635-B21
HPE 2GB (1x2GB) Single Rank x8 PC3-12800E (DDR3-1600) Unbuffered CAS-11 Memory Kit	669320-B21
HPE 2GB (1x2GB) Single Rank x8 PC3L-10600E (DDR3-1333) Unbuffered CAS-9 Low Voltage Memory Kit	647905-B21
HPE 4GB (1x4GB) Dual Rank x8 PC3-12800E (DDR3-1600) Unbuffered CAS-11 Memory Kit	669322-B21
HPE 4GB (1x4GB) Single Rank x4 PC3-12800E (DDR3-1600) Unbuffered CAS-11 Memory Kit	820077-B21
HPE 4GB (1x4GB) Dual Rank x8 PC3L-10600E (DDR3-1333) Unbuffered CAS-9 Low Voltage Memory Kit	647907-B21
HPE 8GB (1x8GB) Dual Rank x8 PC3-12800E (DDR3-1600) Unbuffered CAS-11 Memory Kit	669324-B21
HPE 8GB (1x8GB) Dual Rank x8 PC3L-10600E (DDR3-1333) Unbuffered CAS-9 Low Voltage Memory Kit	647909-B21

Load Reduced DIMMs (LRDIMMs)

HPE 32GB (1x32GB) Quad Rank x4 PC3-14900L (DDR3-1866) Load Reduced CAS-13 Memory Kit	708643-B21

Load Reduced DIMMs (LRDIMMs)

HPE 32GB (1x32GB) Quad Rank x4 PC3L-10600L (DDR3-1333) Load Reduced CAS-9 Low Voltage Memory Kit	647903-B21

HyperCloud DIMMs (HDIMMs)

Memory for AMD Servers

Registered DIMM (RDIMM)

HPE 4GB (1x4GB) Single Rank x4 PC3L-10600R (DDR3-1333) Registered CAS-9 Low Voltage Memory Kit	647871-B21
HPE 4GB (1x4GB) Single Rank x4 PC3-12800R (DDR3-1600) Registered CAS-11 Memory Kit	647873-B21
HPE 8GB (1x8GB) Dual Rank x4 PC3-12800R (DDR3-1600) Registered CAS-11 Memory Kit	695793-B21
HPE 8GB (1x8GB) Dual Rank x4 PC3L-10600R (DDR3-1333) Registered CAS-9 Low Voltage Memory Kit	647877-B21
HPE 8GB (1x8GB) Single Rank x4 PC3-12800R (DDR3-1600) Registered CAS-11 Memory Kit	647879-B21
HPE 16GB (1x16GB) Dual Rank x4 PC3L-10600R (DDR3-1333) Registered CAS-9 Low Voltage Memory Kit	647883-B21
HPE 16GB (1x16GB) Dual Rank x4 PC3-12800R (DDR3-1600) Registered CAS-11 Memory Kit	672633-B21

Load Reduced DIMMs (LRDIMM)

HPE 32GB (1x32GB) Quad Rank x4 PC3L-10600L (DDR3-1333) Load Reduced CAS-9 Low Voltage Memory Kit	647885-B21

Standard Features

What is HPE SmartMemory?	HPE SmartMemory is unique technology introduced for ProLiant Gen8 servers that unlocks certain features available only with HPE Qualified Server memory. HPE SmartMemory enables ProLiant Gen8 systems to reliably identify and verify whether installed memory has passed HPE's rigorous qualification and test processes. And because the memory is authenticated, extended memory performance features can be enabled through the system ROM. HPE SmartMemory will provide a platform to allow future memory-related support enhancements through HPE Active Health System, System Insight Management and Insight Control management software.
Memory Quality and Reliability	Today's IT environments are seeing larger, more complex applications, an increase of mission-critical data moving to the server, increasing demand for transaction processing and critical server consolidation. Memory is a critical component of the information system, significantly defining the systems reliability, performance, and increasingly the overall server and data center power footprint. This is why HPE Qualified Server Memory undergoes intense rigorous qualification process that begins with using the highest quality components sourced from tier 1 DRAM suppliers. Only memory that meets HPE's strict requirements are selected to begin the HPE Memory Qualification process. Unlike most third party memory manufacturers, testing is performed and optimized on every HPE ProLiant server platform to ensure upmost compatibility, performance and reliability.
Performance	Because HPE SmartMemory is certified, performance tested and tuned for HPE ProLiant, certain performance features are unique with HPE SmartMemory. For example, while the industry supports DDR3-1333 RDIMM at 1.5V, today's Gen8 servers support DDR3-1333 RDIMM up to 3 DIMMs per channel at 1066MT/s running at 1.35V. This equates to up to 20% less power at the DIMM level with no performance penalty and now with HyperCloud Memory on DL360p Gen8 and the DL380p Gen8 servers will support 3 DIMMs per channel at 1333MT/s running at 1.5 V. In addition, the industry supports UDIMM at 2 DIMMs per channel at 1066MT/s. HPE SmartMemory supports 2 DIMMs per channel 1333MT/s, or 25% greater bandwidth.
Power Efficiency	Memory plays an increasingly larger part of the server's power consumption and choosing the most efficient memory is a critical component in reducing your data center's overall power and cooling requirements. This savings translates to reduced operating cost and a faster return on investment, freeing up IT budget spent on power and cooling. Hewlett Packard Enterprise is committed to helping you get the maximum benefit per watt out of your IT infrastructure. For example, HPE SmartMemory 1.35V DDR3-1333 Registered memory is engineered to achieve the same performance level as 1.5V memory. This also simplifies the HPE memory portfolio making it easier to select the right memory.
Pre-Failure Alert	When used in conjunction with Systems Insight Manager, the SMART capable firmware enables fault prediction capabilities. If potential problems develop in one of the DIMMs, Systems Insight Manager lets you know in advance so you can have the DIMM replaced, before it fails, under warranty. **NOTE:** HPE memory is protected by a Pre-Failure Alert when used with HPE Systems Insight Manager, allowing memory to be replaced before failure under warranty. In addition, HPE memory is covered by a one or three-year limited on-site warranty period for the system in which they are installed. The memory warranty is automatically uplifted when used in a server for which a Care Pack is purchased. Please see the Support Services section below for additional services.
HPE Advanced Memory Error Detection Technology	In the ProLiant System ROM upgrade (version May 2011 or later), HPE enhanced memory error protection with HPE Advanced Memory Error Detection Technology. This innovation monitors several memory parameters and seeks out specific defects that either cause performance degradation or significantly increase the probability of a non-recoverable memory condition. By improving the prediction of critical memory error conditions, this technology prevents unnecessary DIMM replacement and increases server uptime. For more information on the HPE Advanced Memory Error Detection Technology:

Standard Features

	http://h20000.www2.hp.com/bc/docs/support/SupportManual/c02878598/c02878598.pdf
HPE Active Health System	Future ROM updates will enable HPE SmartMemory to will work in conjunction with HPE Active Health System which monitors changes to the server hardware configuration to enable lifecycle monitoring of memory health status. Having insight into memory related service events will shorten diagnosing problems and deliver rapid resolutions if and when failures occur. Whereas Pre-Failure Alert simply notifies the administrator of an impending failure, HPE SmartMemory will provide insight with rich information on memory-related events like multi-bit errors or configuration issues.
Support Matrix	Please see the following URL for the latest list of supported servers: **http://www.hpproliantoptions.com/**
Warranty	For details on HPE Qualified Options Limited Warranty visit: **http://h18004.www1.hp.com/products/servers/platforms/warranty/index.html**
Other Resources	For information regarding HPE Qualified Server Memory visit: **http://www.hp.com/products/memory** For the latest updates on HPE Qualified Options visit: **http://www.hp.com/go/hpqo**
Memory FAQs	**What is HPE SmartMemory?** HPE SmartMemory is unique technology introduced for HPE ProLiant Gen8 servers that unlocks certain features available only on HPE Qualified Server memory. HPE SmartMemory enables HPE ProLiant Gen8 systems to reliably identify and verify whether installed memory has passed HPE's rigorous qualification and test processes. And because the memory is authenticated, certain extended memory performance features can be enabled through the system ROM. HPE SmartMemory will allow future support enhancements through HPE Active Health System and other management software. HPE SmartMemory is ideal for customers who want assurance of buying genuine HPE Qualified memory that is performance tuned for HPE ProLiant servers, and capable of future enhanced support through HPE Active Health and other management software. **What are the key benefits of HPE SmartMemory?** • Increased reliability since the memory undergoes an authentication process that verifies qualification has been performed on HPE platforms • Performance tuned and optimized for HPE ProLiant servers • Future enhanced support through HPE Active Health System **Is HPE SmartMemory using proprietary memory technology?** HPE SmartMemory uses industry standard memory that has been validated on HPE systems. Since the memory has completed HPE's rigorous test processes on HPE platforms, every memory characteristic is known to have met the highest standards. **Will 3rd Party DDR3 memory work in my HPE ProLiant server?** Yes. Hewlett Packard Enterprise supports the Customers' right to choose other memory suppliers but is confident in HPE's quality and innovation. Features that are supported today for 3rd Party memory such as pre-failure alerting and error event logging in the IML will remain the same. Enhanced memory performance features that go beyond processor/chipset manufacturer POR specifications for memory speed and power requirements will be unique to HPE SmartMemory as they are a benefit of our system-level engineering skills. **Will previous G6/G7 DDR3 memory work in my HPE ProLiant server?** HPE DIMMs from previous generations have not been qualified on ProLiant Gen8 servers. Certain HPE SmartMemory features such as memory authentication and enhanced memory performance will not be supported. **Will there be unique part numbers for Intel and AMD supported HPE ProLiant servers?** Hewlett Packard Enterprise has different part numbers for AMD and Intel servers because there are

Standard Features

slight timing differences in the memory controllers which can lead to different list of qualified parts.

Will 1.35V low voltage memory run at 1.5V?

Yes. 1.35V memory will safely run at 1.5V without harming the DIMM. RDIMMs operating at either 1.35V or 1.5V may be mixed in any order but the system will power them at the higher voltage.

What is LRDIMM?

LRDIMM or Load Reduced DIMM is an industry standard memory technology that has been adopted by Intel for their next generation Intel® Xeon® E5-2600 family processor that addresses the need for greater memory bandwidth and capacity. LRDIMM memory buffer reduces the electrical load to the memory controller and allows higher capacity memory to run at 3 DIMMs per channel. LRDIMM is for customers who require the maximum memory capacity.

Will LRDIMMs work with RDIMMs or UDIMMs?

LRDIMM, RDIMM and UDIMMs are all distinct memory technologies and cannot be mixed within a server. The majority of ProLiant Gen8 servers support RDIMM, UDIMM and LRDIMM.

Why do some DIMMs include a heat spreader while other DIMMs of the same capacity, rank and speed do not?

When a DIMM is first launched, it may require a heat spreader which allows the modules to maintain certain temperature when installed in the server. As power consumption tends to decrease with new DRAM revisions, the heat spreader is no longer required. The use of these DIMMs with or without heat spreaders has been validated both functionally and thermally. They can be mixed within a system without issues.

Service and Support

Service and Support

HPE Technology Services
HPE Technology Services offers you technical consultants and support expertise to solve your most complex infrastructure problems. We help keep your business running, boost availability, and avoid downtime.

Protect your business beyond warranty with HPE Care Pack Services
When you buy HPE Options, it's also a good time to think about what level of service you may need. HPE Care Pack services provide total care and support expertise with committed response choices designed to meet your IT and business need.

HPE Foundation Care services deliver scalable support-packages for Hewlett Packard Enterprise industry-standard servers and software. You can choose the type and level of service that is most suitable for your business needs. New to this portfolio is HPE Collaborative Support. If you are running business critical environments, Hewlett Packard Enterprise offers Proactive Care or Critical Advantage. These services help you deliver high levels of application availability through proactive service management and advanced technical response.

Here is the support service recommendation from the Foundation Care and Proactive Care portfolio. For customized support service solution, Hewlett Packard Enterprise can work with you to tailor a service solution for your unique support requirements using broader services portfolio of Foundation Care and Proactive Care.

Recommended HPE Care Pack Services for optimal satisfaction with your HPE product

Recommended Services

3-Year HPE 24x7 4 hour Response, Hardware Support Onsite Service
Provides you with rapid remote support and if required an Hewlett Packard Enterprise Authorized representative who will arrive on site any time and day of the year to begin hardware maintenance service within 4 hours of the service request being logged.

OR

3-Year HPE 24x7 4 hour Response, HPE Collaborative Support
Offers customers a single point of contact for server problem diagnosis, hardware problem resolution, and basic software problem diagnosis, fault isolation, and resolution if available to HPE. If the problem is with HPE HW, the representative will arrive on site any time and day of the year to begin hardware maintenance service within 4 hours of the service request being logged. In case, the issue is with HPE or supported third-party software product and cannot be resolved by applying known fixes, Hewlett Packard Enterprise will contact the third-party vendor and create a problem incident on your behalf.

HPE ProLiant Server Hardware Installation
Provides for the basic hardware installation of Hewlett Packard Enterprise branded servers, storage devices and networking options to assist you in bringing your new hardware into operation in a timely and professional manner

Related HPE Care Pack Services to enhance your HPE product experience

Related Services

3-Year HPE 24x7 4 hour Response, Proactive Care or Critical Advantage
Helps optimize your systems and delivers high levels of application availability through proactive service management and advanced technical response. A skilled Technical Manager will own your query or issue end to end until resolved, delivering a single point of contact for you

OR

3-Year HPE 6-hour Onsite Call-to-Repair, HPE Collaborative Support

Service and Support

	Offers customers a single point of contact for server problem diagnosis, hardware problem resolution to return the hardware in operating condition within 6 hours of the initial service request to the HPE Global Solution Center, and basic software problem diagnosis, fault isolation, and resolution if available to HPE. In case, the issue is with HPE or supported third-party software product and cannot be resolved by applying known fixes, Hewlett Packard Enterprise will contact the third-party vendor and create a problem incident on your behalf. **HPE Proactive Select Service** Provides a flexible way to purchase HPE best-in-class consultancy and technical services. You can buy Proactive Select Service Credits when you purchase your hardware and then use the credits over the next 12 months.
Insight Remote Support	Provides 24 X 7 remote monitoring, proactive notifications, and problem resolution. Learn more **http://www.hp.com/go/insightremotesupport**
HPE Support Center	Personalized online support portal with access to information, tools and experts to support Hewlett Packard Enterprise business products. Submit support cases online, chat with HPE experts, access support resources or collaborate with peers. Learn more **http://www.hp.com/go/hpsc** The HPE Support Center Mobile App* allows you to resolve issues yourself or quickly connect to an agent for live support. Now, you can get access to personalize IT support anywhere, anytime. HPE Insight Remote Support and HPE Support Center are available at no additional cost with a HPE warranty, HPE Care Pack or Hewlett Packard Enterprise contractual support agreement. *The Hewlett Packard Enterprise Support Center Mobile App is subject to local availability
Parts and materials	Hewlett Packard Enterprise will provide HPE-supported replacement parts and materials necessary to maintain the covered hardware product in operating condition, including parts and materials for available and recommended engineering improvements. Supplies and consumable parts will not be provided as part of this service; standard warranty terms and conditions apply. Parts and components that have exceeded their maximum supported lifetime and/or the maximum usage limitations as set forth in the manufacturer's operating manual or the technical product data sheet will not be provided, repaired or replaced as part of this service.
Warranty / Service Coverage	For ProLiant servers and storage systems, this service covers HPE-branded hardware options qualified for the server, purchased at the same time or afterward, internal to the enclosure, as well as external monitors up to 22" and tower UPS products; these items will be covered at the same service level and for the same coverage period as the server unless the maximum supported lifetime and/or the maximum usage limitation has been exceeded. Coverage of the UPS battery is not included; standard warranty terms and conditions apply. The defective media retention service feature option applies only to Disk or eligible SSD/Flash Drives replaced by HPE due to malfunction. It does not apply to any exchange of Disk or SSD/Flash Drives that have not failed. SSD/Flash Drives that are specified by HPE as consumable parts and/or that have exceeded maximum supported lifetime and/or the maximum usage limit as set forth in the manufacturer's operating manual or the technical data sheet are not eligible for the defective media retention service feature option.
For more information	To learn more on services for HPE ESSN Options, please contact your Hewlett Packard Enterprise sales representative or Hewlett Packard Enterprise Authorized Channel Partner. Or visit: **http://www.hp.com/services/proliant** or **http://www.hp.com/services/bladesystem**

Technical Specifications

For detailed memory configuration rules and guidelines, please use the Online DDR3 Memory Configuration Tool:
http://www.hp.com/go/ddr3memory-configurator

Memory Subsystem Architecture
The memory subsystem architecture is dependent on the ProLiant Gen8 server platform.

For servers using the Intel® Xeon® E5-2600 family processor series:

- 16 DIMM slots: Four memory channels per installed processor with two DIMMs per channel for a total of eight (8) DIMMs or a grand total of sixteen (16) DIMMs for the server. Up to 32GB capacity DIMMs are supported for 512GB of memory (16 DIMM slots x 32GB per DIMM).
- 24 DIMM slots: Four memory channels per installed processor with three DIMMs per channel for a total of twelve (12) DIMMs or a grand total of twenty-four (24) DIMMs for the server. Up to 32GB capacity DIMMs are supported for 768GB of memory (24 DIMM slots x 32GB per DIMM).

For servers using the Intel® Xeon® E5-2400 family processor series:

- 12 DIMM slots: Three memory channels per installed processor with two DIMMs per channel for a total of six (6) DIMMs or a grand total of twelve (12) DIMMs for the server. Up to 32GB capacity DIMMs are supported for 384GB of memory (12 DIMM slots x 32GB per DIMM).

For servers using the AMD Opteron 6200 family processor series:

- 16 DIMM slots: Four memory channels per installed processor with two DIMMs per channel for a total of eight (8) DIMMs or a grand total of sixteen (16) DIMMs for the server. Up to 32GB capacity DIMMs are supported for 512GB of memory (16 DIMM slots x 32GB per DIMM).
- 24 DIMM slots: Four memory channels per installed processor with three DIMMs per channel for a total of twelve (12) DIMMs or a grand total of twenty-four (24) DIMMs for the server. Up to 32GB capacity DIMMs are supported for 768GB of memory (24 DIMM slots x 32GB per DIMM).

For platform specific memory details please refer to the HPE ProLiant user guide at: **http://www.hp.com/support**.

General Memory Population Rules and Guidelines:

- Install DIMMs only if the corresponding processor is installed.
- If only one processor is installed in a two processor system, only half of the DIMM slots are available.
- To maximize performance, it is recommended to balance the total memory capacity between all installed processors and load the channels similarly whenever possible.
- When two processors are installed, balance the DIMMs across the two processors.
- White DIMM slots denote the first slot to be populated in a channel.
- Place the DIMMs with the highest number of ranks in the white slot when mixing DIMMs of different ranks on the same channel.
- Do not mix UDIMMs, RDIMMs or LRDIMMs.
- Quad rank RDIMMs are not supported in HPE ProLiant Gen8 servers.
- Quad rank LRDIMMs are capable of up to three DIMMs per channel.
- RDIMMs operating at either 1.35V or 1.5V may be mixed in any order, but the system will power them at the higher voltage.
- DIMMs of different speeds may be mixed in any order; the server will select a common optimal speed.
- The maximum memory speed is a function of the memory type, memory configuration, and processor model.
- The maximum memory capacity is a function of the memory type and number of installed processors.
- To realize the performance memory capabilities listed in this document, HPE SmartMemory is required.

Technical Specifications

Memory Configuration Exceptions:

- The Intel Xeon E5-2620 processor model does not support DIMMs at 1.35V. The system will default to 1.5V operation.

Intel Gen8 Supported Memory Bandwidth for HPE ProLiant Gen8 Intel® Xeon® E5-2XXX v2 Series Processor Family

DIMM Type ->	Registered Dimms (RDIMMs)								Load Reduced (LRDIMMs)	Unbuffered with ECC DIMMs (UDIMMs)					
DIMM Rank ->	Single Rank (1R)		Dual Rank (2R)	Dual Rank (2R)	Single Rank (1R)	Single Rank (1R)	Dual Rank (2R)	Dual Rank (2R)	Quad Rank (4R)	Single Rank (1R)		Dual Rank (2R)			
DIMM Capacity ->	4GB	4GB	8GB	8GB	8GB	8GB	16GB	16GB	32GB	2GB	2GB	4GB	4GB	8GB	8GB
DIMM Native Speed (MT/s) ->	1600	1866	1600	1866	1600	1866	1600	1866	1866	1600	1866	1600	1866	1600	1866
Voltage	LV	Std	LV	Std	LV	Std	LV	Std	Std	LV	Std	LV	Std	LV	Std
SLOTS THAT CAN BE POPULATED															
12 slot servers	12	12	12	12	12	12	12	12	12	12	12	12	12	12	12
16 slot servers	16	16	16	16	16	16	16	16	16	16	16	16	16	16	16
24 slot servers	24	24	24	24	24	24	24	24	24	16	16	16	16	16	16
32 slot server	32	32	32	32	32	32	32	32	32	n/a	n/a	n/a	n/a	n/a	n/a
48 slot servers	48	48	48	48	48	48	48	48	48	n/a	n/a	n/a	n/a	n/a	n/a
64 slot servers#	64	64	64	64	64	64	64	64	64	n/a	n/a	n/a	n/a	n/a	n/a
MAXIMUM CAPACITY (GB)*															
12 slot servers	48	48	96	96	96	96	192	192	384	24	24	48	48	96	96
16 slot servers	64	64	128	128	128	128	256	256	512	32	32	64	64	128	128
24 slot servers	96	96	192	192	192	192	384	384	768	32	32	64	64	128	128
32 slot servers	128	128	256	256	256	256	512	512	1024	n/a	n/a	n/a	n/a	n/a	n/a
48 slot server	192	192	384	384	384	384	768	768	1536	n/a	n/a	n/a	n/a	n/a	n/a
64 slot servers#	256	256	512	512	512	512	1024	1024	2048	n/a	n/a	n/a	n/a	n/a	n/a
POPULATED DIMM SPEED (MT/s)															
1 DIMM Per Channel	1600	1866	1600	1866	1600	1866	1600	1866	1866	1600	1866	1600	1866	1600	1866

Technical Specifications

2 DIMM Per Channel	1600	1866	1600	1866	1600	1866	1600	1866	1866	1600	1866	1600	1866	1600	1866
3 DIMM Per Channel	800	1333	800	1333	800	1333	800	1333	1333	n/a	n/a	n/a	n/a	n/a	n/a

Memory speed is a function of the processor QPI bus speed.
* Maximum capacity will vary based on individual server platform qualification schedule
For HPE SmartMemory, UDIMM is supported at 2DPC@DDR3-1866. Third party memory may only support up to 2DPC@DDR3-1333 or 1600.
All configurations on 64 slot server run at DDR3-1066.

Intel Gen8 Supported Memory Bandwidth for HPE ProLiant Gen8 Intel® Xeon® E5-2XXX Series Processor Family

DIMM Type ->	Registered Dimms (RDIMMs)								Load Reduced (LRDIMMs)	Unbuffered with ECC DIMMs (UDIMMs)			
DIMM Rank ->	Single Rank (1R)		Dual Rank (2R)	Dual Rank (2R)	Single Rank (1R)	Dual Rank (2R)	Dual Rank (2R)	Three Rank (3R)	Quad Rank (4R)	Single Rank (1R)	Single Rank (1R)	Dual Rank (2R)	Dual Rank (2R)
DIMM Capacity ->	4GB	4GB	8GB	8GB	8GB	16GB	16GB	24GB	32GB	2GB	2GB	4GB	4GB
DIMM Native Speed (MT/s) - >	1333	1600	1333	1600	1600	1333	1600	1333	1333	1333	1600	1333	1600
Voltage	LV	Std	LV	Std	Std	LV	Std	LV	LV	LV	Std	LV	Std
SLOTS THAT CAN BE POPULATED													
12 slot servers	12	12	12	12	12	12	12	n/a	12	12	12	12	12
16 slot servers	16	16	16	16	16	16	16	16*****	16	16	16	16	16
24 slot servers	24	24	24	24	24	24	24	n/a	24	16	16	16	16
32 slot server	32	32	32	32	32	32	32	32******	32	n/a	n/a	n/a	n/a
48 slot servers	48	48	48	48	48	48	48	n/a	48	n/a	n/a	n/a	n/a
64 slot servers#	64	64	64	64	64	64	64	n/a	64	n/a	n/a	n/a	n/a
MAXIMUM CAPACITY (GB)*													
12 slot servers	48	48	96	96	96	192	192	n/a	384	24	24	48	48
16 slot servers	64	64	128	128	128	256	256	384	512	32	32	64	64
24 slot servers	96	96	192	192	192	384	384	n/a	768	32	32	64	64
32 slot servers	128	128	256	256	256	512	512	n/a	1024	n/a	n/a	n/a	n/a
48 slot server	192	192	384	384	384	768	768	n/a	1536	n/a	n/a	n/a	n/a

Technical Specifications

64 slot servers#	256	256	512	512	512	1024	1024	n/a	2048	n/a	n/a	n/a	n/a
POPULATED DIMM SPEED (MT/s)													
1 DIMM Per Channel	1333	1600	1333	1600	1600	1333	1600	n/a	1333***	1333	1600	1333	1600
2 DIMM Per Channel	1333	1600	1333	1600	1600	1333	1600	1333###	1333***	1333****	1600	1333****	1600
3 DIMM Per Channel	1066**	1333##	1066**	1333##	1333##	1066**	1333##	n/a	1066	n/a	n/a	n/a	n/a

Memory speed is a function of the processor QPI bus speed.
* Maximum capacity will vary based on individual server platform qualification schedule
** For HPE SmartMemory, RDIMM support 3DPC@ DDR3-1066 at 1.35V. Third party memory may only support up to 3DPC@DDR3-1066 at 1.5V.
*** LRDIMM enables 3 DIMMs per channel. HPE SmartMemory will support up to 3DPC@DDR3-1066 at 1.35V. Third party memory may only support 3DPC @DDR3-1066 at 1.5V.
**** For HPE SmartMemory, UDIMM is supported at 2DPC@DDR3-1333. Third party memory may only support up to 2DPC@DDR3-1066.
***** This configuration is supported on BL460c Gen8 only with memory part number 700404-B21
****** This configuration is supported on BL660c Gen 8 only with the memory part number 716324-B21
# All configurations on 64 slot server run at DDR3-1066.
RBSU setting required
Only supported on BL460c and BL660c

AMD Gen8 Supported Memory Bandwidth

DIMM Type ->	Registered Dimms (RDIMMs)						Load Reduced (LRDIMMs)
DIMM Rank ->	Single Rank (1R)			Dual Rank (2R)			Quad Rank (4R)
DIMM Capacity ->	4GB	4GB	8GB	8GB	16GB	16GB	32GB
DIMM Native Speed (MT/s) ->	1333	1600	1600	1333	1333	1600	1066
Voltage	LV/ULV	Std	Std	LV/ULV	LV/ULV	Std	LV
SLOTS THAT CAN BE POPULATED							
16 slot servers	16	16	16	16	16	16	16
24 slot servers	24	24	24	24	24	24	24
MAXIMUM CAPACITY (GB)*							
16 slot servers	64	64	128	128	256	256	512
24 slot servers	96	96	192	192	384	384	768
POPULATED DIMM SPEED (MT/s)							
1 DIMM Per Channel	1333	1600	1600	1333	1333	1600	1333
2 DIMM Per Channel	1333	1600	1600	1333/ 1066[2]	1333/ 1066[2]	1600	1333
3 DIMM Per Channel	1066	1066	1066	1066/ 800[3]	1066/ 800[3]	1066	800[4]

[1] Maximum capacity will vary based on individual server platform.

Technical Specifications

[2] Ultra Low Voltage 8GB and 16GB dual rank operate at 1066MT/s speed in 2 DPC configurations.
[3] Ultra Low Voltage 8GB and 16GB dual rank operate at 800MT/s speed in 3 DPC configurations.
[4] LRDIMM capable of 3 DIMMs per channel.

Memory Speed by Processor Model

HPE ProLiant Gen8 Intel® Xeon® E5-2600 Series Processor Family:	
Processor Models	**Supported Memory Speeds**
E5-2690, E5-2680, E5-2670, E5-2667, E5-2665, E5-2660, E5-2650, E5-2650L, E5-2643, E5-2637, E5-2537	1600/1333/1066MHz
E5-2640, E5-2630, E5-2630L, E5-2620	1333/1066MHz
E5-2609, E5-2603	1066MHz

HPE ProLiant Gen8 Intel® Xeon® E5-2400 Series Processor Family:	
Processor Models	**Supported Memory Speeds**
E5-2470, E5-2450	1600/1333/1066MHz
E5-2450L, E5-2440, E5-2430, E5-2420	1333/1066MHz
E5-2430L, E5-2407, E5-2403	1066MHz

HPE ProLiant Gen8 Intel® Xeon® E5-2600 v2 Series Processor Family:	
Processor Models	
E5-2690 v2, E5-2680 v2, E5-2670 v2, E5-2660 v2, E5-2687W v2, E5-2667 v2, E5-2650 v2, E5-2640 v2	
E5-2643 v2, E5-2630 v2, E5-2620 v2, E5-2637 v2, E5-2609 v2, E5-2603 v2	
E5-2605L v2, E5-2630L v2	

HPE ProLiant Gen8 Intel® Xeon® E5-2400 v2 Series Processor Family:	
Processor Models	
E5-2470 v2, E5-2450 v2, E5-2440 v2	
E5-2450L v2, E5-2430 v2, E5-2420 v2, E5-2430L v2	
E5-2407 v2, E5-2403 v2	

HPE ProLiant Gen8 AMD Series Processor Family:	
Processor Models	**Supported Memory Speeds**
6204, 6212, 6220, 6230HE, 6234, 6238, 6262HE, 6272, 6274, 6276, 6278, 6282SE, 6284SE	1600/1333/1066MHz

NOTE: Capacity references are rounded to the common gigabyte (GB) values.

- 2GB = 2,048MB
- 4GB = 4,096MB
- 8GB = 8,192MB
- 16GB = 16,384MB
- 32GB = 32,768MB

Technical Specifications

Memory options part number decoder

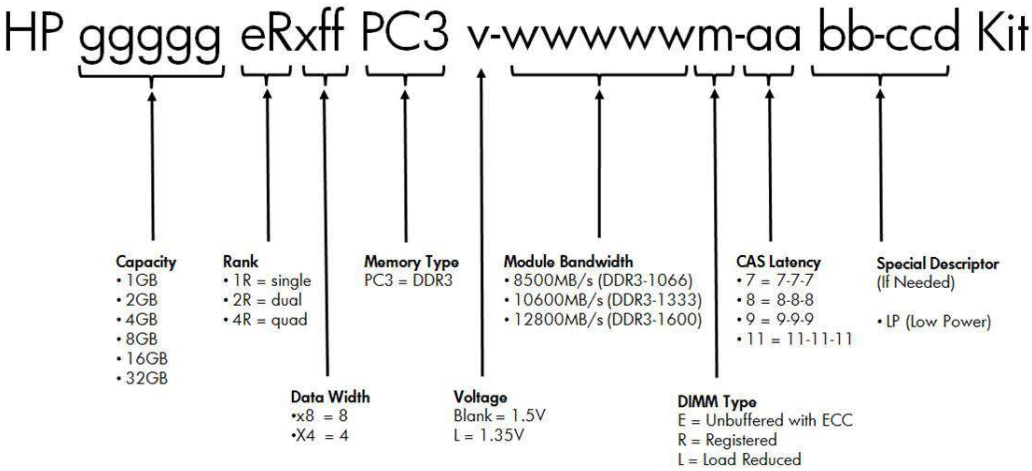

Environment-friendly Products and Approach	**End-of-life Management and Recycling**	Hewlett Packard Enterprise offers end-of-life Hewlett Packard Enterprise product return, trade-in, and recycling programs in many geographic areas. For trade-in information, please go to: **http://www.hp.com/go/green**. To recycle your product, please go to: **http://www.hp.com/go/green** or contact your nearest Hewlett Packard Enterprise sales office. Products returned to Hewlett Packard Enterprise will be recycled, recovered or disposed of in a responsible manner. The EU WEEE directive (2002/95/EC) requires manufacturers to provide treatment information for each product type for use by treatment facilities. This information (product disassembly instructions) is posted on the Hewlett Packard Enterprise web site at: **http://www.hp.com/go/green**. These instructions may be used by recyclers and other WEEE treatment facilities as well as HPE OEM customers who integrate and re-sell Hewlett Packard Enterprise equipment.

Summary of Changes

Date	Version History	Action	Description of Change
14-Oct-2016	From Version 14 to 15	Changed	Rebranding Edition
01-Jun-2015	From Version 13 to 14	Added	Skus added in Overview section: • 820077-B21
		Removed	Skus removed per OBS in Overview section • 716324-B21 • 700404-B21 • 715166-B21 • 647869-B21 • 647875-B21 • 647881-B21
31-Mar-2014	From Version 12 to 13	Added	HPE 64GB Eight Rank x4 PC3-12800L Load Reduced CAS-11 Memory Kit was added.
03-Mar-2014	From Version 11 to 12	Added	HPE 24GB Three Rank x4 PC3L-10600R Registered CAS-9 Low Voltage Memory Kit was added.
08-Oct-2013	From Version 10 to 11	Changed	Corrections made to the formatting of the Tables in the Technical Specifications section.
10-Sep-2013	From Version 9 to 10	Added	New models were added.
19-Feb-2013	From Version 8 to 9	Changed	Changes made to the add the HPE SmartMemory 3Rank 24GB@1333 low voltage Memory in standard height for Intel Servers
24-Sep-2012	From Version 7 to 8	Changed	Changes made to the Overview and Service and Support sections.
28-Aug-2012	From Version 6 to 7	Changed	Changes made to the Table in the Technical Specifications section.
13-Aug-2012	From Version 5 to 6	Changed	Changes made throughout the QuickSpecs.
04-Jun-2012	From Version 4 to 5	Changed	Models and Memory sections were revised.
14-May-2012	From Version 1 to 4	Changed	Changes made to the What's New and Models sections.

Sign up for updates

© Copyright 2016 Hewlett Packard Enterprise Development LP. The information contained herein is subject to change without notice. The only warranties for Hewlett Packard Enterprise products and services are set forth in the express warranty statements accompanying such products and services. Nothing herein should be construed as constituting an additional warranty. Hewlett Packard Enterprise shall not be liable for technical or editorial errors or omissions contained herein.

Xeon and Intel are registered trademarks of Intel Corporation.

c04111535 - 14225 - Worldwide - V15 - 14-October-2016

Hewlett Packard Enterprise